Available online at www.elixirpublishers.com (Elixir International Journal)

Electrical Engineering

Elixir Elec. Engg. 114 (2018) 49520-49525

ISSN: 2229-712X

Design and Implementation of 500W Remote Controlled Transformer-less Solar System

Yisa M.S[1], Ezechukwu O. A[1], Uwaechi P C[1] and Michael.E[2]

[1]Nnamdi Azikiwe University, Awka – Nigeria.

[2]Scientific equipment development institute, Minna- Nigeria.

ARTICLE INFO

Article history:

Received: 02 November 2017;

Received in revised form: 29 December 2017;

Accepted: 8 January 2018;

Keywords

DC–AC power Conversion,
Photovoltaic system,
Transformer-less inverter,
Remote control,
Solar energy.

ABSTRACT

Over 70% of the inverter systems are designed with transformers which are galvanic isolations. However, such inverters are big, heavy and expensive with low efficiency. In this work, a transformer-less PV system is introduced. It is smaller, lighter, and cheaper with higher efficiency as compared to the transformer of the same rating. The proposed inverter employs push pull circuit, an H bridge circuit, the oscillating circuit, an automatic changeover dual battery bank and an RF remote control circuit unit. The switching technique of the proposed inverter consists of a pulse width modulation system along with grid synchronization condition. As the suggested method is entirely transformer-less, there is a reduction in transformer loss which tremendously reduces the total harmonic distortion (THD) to even less than1% with an assumption of; inductor is ideal without any internal resistance, the switches and diodes are ideal with the dead line between the switches are neglected. A filtering capacitor provides a nearly constant output current which stabilizes the system rapidly and reduces harmonics generated by the switching circuit. Overall performance of the proposed inverter was simulated with PROTEUS and validated with MATLAB which produced a pure sinusoidal waveform as the output voltage. The proposed inverter minimizes size and increases the inverter efficiency to 90% which can be used in our homes, offices and schools for lightening and charging.

© 2018 Elixir All rights reserved.

1. Introduction

With the worsening situation of the nation's energy shortage and environmental pollution problems, protecting the energy and the environment becomes the major problem for engineers. Thus, the development and application of clean renewable energy such as solar, wind, fuel cell, tidal and geothermal heat are attracting more and more attention. Among them, solar power will be dominant because of its availability and reliability in this country. The cost of utilizing the renewable energy is at ever decreasing rate. The sun, offers unlimited energy for harnessing and for this very reason, Photo Voltaic (PV) systems consisting of PV modules, for generating environmental friendly, power is gaining more and more recognition with each passing day. [1]

The PV modules comprise of several solar cells, which convert the energy of the sunlight directly into electricity and are connected as required to provide desired levels of direct current (DC) and voltage. They produce electricity due to a quantum mechanical process known as the "Photovoltaic effect". The major drawback with these PV systems is that their cost is much high compared to the convectional sources such as fossil fuel and their efficiency are also quite low. [2]

Power semi-conductor devices represent the heart of the modern power electronics and are being extensively used in power electronic converters in the form of ON or OFF switches, and helps to convert power from one form to another. There are four basic conversion functions that can be implemented such as:

i. AC – AC converter (AC voltage controller)
ii. AC – DC converter(controlled rectifier)
iii. DC – DC converter (DC chopper)
iv. DC – AC converter (inverters)

Inverter is one of the converter families which are called DC to AC converter. It converts DC power to AC power to a symmetric AC output voltage at desired magnitude and frequency. [3]

Inverter is widely used in industrial application such as variable speed, AC motor drives, induction heating, standby power supplies and uninterruptible power supply. The DC power input of inverter is obtained from the existing power supply network. It can be a battery, photovoltaic, wind energy, fuel cell or other DC sources. [4]

A Sinusoidal Pulse Width Modulation (SPWM) is widely used in power electronics to digitize the power so that a sequence of voltage pulses can be generated by the ON and OFF of the power switches. The pulse width modulation inverter has been the main choice in power electronics for decades, because of its circuit simplicity and rugged control scheme. SPWM techniques are characterized by constant amplitude pulse with different duty cycle for each period. The width of the pulse is modulated in order to obtain inverter output voltage control and to reduce its harmonic content. [5]

Communication is the transmission of intelligence (information) between two or more points over wires or by air. A complete system includes a transmitter, a channel and a receiver to recover the information [6].

Tele:
E-mail address: ezechukwuosieloka@gmail.com

© 2018 Elixir All rights reserved

In this paper, new models of inverter operate without a transformer by using an effective single phase DC-AC boost choppers and a remote control to switch the system 'on' and 'off'. The PV configuration consists of five (5) main components namely:

(a) Solar panel / DC Voltage Source
(b) Charge controller
(c) Battery
(d) DC – AC Inverter
(e) Remote control unit

2. Proposed inverter system

The method adopted includes;

- Design of high frequency chopper circuit
- Design of oscillator circuit
- Design of changeover circuit
- Design of H-bridge driver circuit
- Coupling of the various units

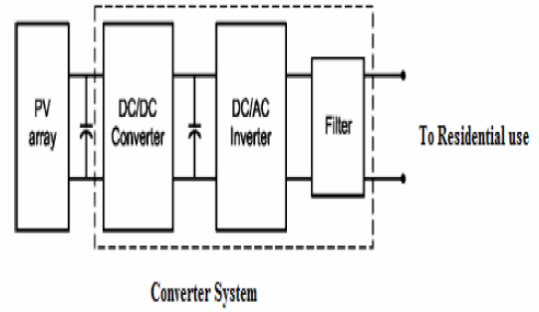

Figure 1. Block diagram of photovoltaic system.

All existing models of transformer-less inverters use either single phase or multiple phases. They also use more components like high frequency transformers (boost choppers), filters, diode rectifiers and a bridge inverter. A new single switch inverter is developed which is capable of generating a pure sinusoidal waveform from a fixed dc input voltage. The new switch inverter is a full bridge voltage source inverter, a double bank battery with a remote control.

It consists of two arms with a two semiconductor switches on both arms with antiparallel freewheeling diodes for discharging the reverse current. In case of resistive-inductive load, the reverse load current flows through these diodes. These diodes provide an alternate path to inductive current which continue to flow during the 'turn-off' condition. In switching process, four switches are grouped into two; Q1 and Q2 are in one group and Q3 and Q4 are in the other group. When Q1 and Q2 are switched 'on', Q3 and Q4 are turned 'off'. Similarly, when Q3 and Q4 are switched 'on', Q1 and Q2 are forced off because a short circuit across the dc link voltage source V_1 would be produced.

The capacitor is energy storage device which is optimally designed to ensure small size and low cost.

A double bank battery having two auxiliary batteries is introduced so that when one battery is charging, the other one will be working

3. Mathematical Modeling of the inverter

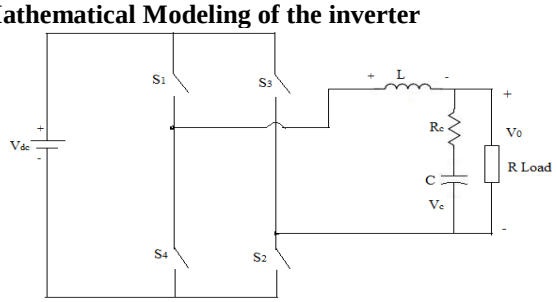

Figure 2. Schematic diagram of 1-Φ inverter model.

The inverter in the above figure is being modeled and analyzed with LC filter on the load side which considers R as load.

Where

V_{dc} is Supply DC Voltage
S_1, S_2, S_3, S_4 are switches
L is filter inductance
R_c is damping resistor
C is filter capacitor
R is load resistance

The main purpose of using the damping resistor is to damp out the oscillations occurring due to the use of LC filter resonance.

Case 1

When switches S_1 and S_2 are ON, then circuit is shown in Fig. 3

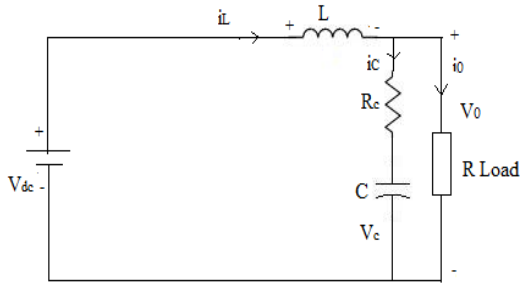

Figure 3. Equivalent circuit when switches S_1 and S_2 are ON.

Applying Kirchhoff's voltage law (KVL) in Fig.3

$$\mathbf{L\frac{di_L}{dt} = V_{dc} - V_o} \quad (1)$$

And

$$\mathbf{I_c = I_L - I_o} \quad (2)$$

Where Io=load current

$$\mathbf{C\frac{dV_c}{dt} = I_L - \frac{V_o}{R}} \quad (3)$$

Case 2

When switches S_3 and S_4 are ON, the resultant circuit will be as shown in fig. 4

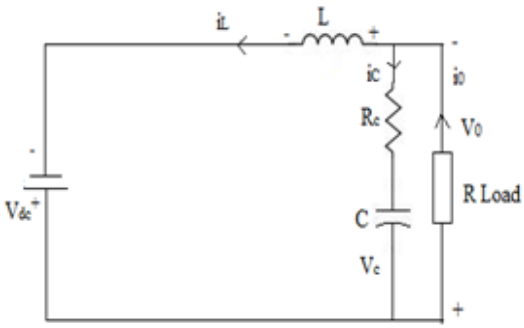

Figure 4. Equivalent circuit when switches S_3 and S_4 are ON.

By applying Kirchhoff's voltage law (KVL) in the above circuit

$$\mathbf{L\frac{di_L}{dt} = V_o - V_{dc}} \quad (4)$$

And

$$\mathbf{i_c = (-i_L - i_o)} \quad (5)$$

$$\mathbf{C\frac{dV_c}{dt} = (-i_l - \frac{V_o}{R})} \quad (6)$$

Let consider average value of the inductor current and capacitor voltage over a switching period T_s.

$$\mathbf{L\frac{(d)i_L T_s}{dt} = (dV_{dc} - V_o)T_s + d^1(V_o - V_{dc})T_s} \quad (7)$$

Let define an operating point as follows

D is Duty cycle

V_{dc} is input voltage
$V_o$as output voltage
V_c as capacitor voltage
I_L is inductor current
$I_s$is source current

The root mean square (rms) output voltage can be found from

$$\mathbf{V_0 = \left(\frac{2}{T_0}\int_0^{T_0/2} V_s^2 dt\right)^{1/2} = V_s} \quad (8)$$

Equation (5) can be extended to express the instantaneous output voltage in a Fourier series as

$$\mathbf{v_o = \sum_{n=1,3,5,\ldots}^{\infty} \frac{4V_s}{n\pi} \sin n\omega t} \quad (9)$$

and for n=1, equation (6) gives the rms value of fundamental component as

$$\mathbf{V_1 = \frac{4V_s}{\sqrt{2}\pi} = 0.90V_s} \quad (10)$$

The instantaneous load current $\mathbf{i_o}$ for an RL load becomes

$$\mathbf{i_o = \sum_{n=1,3,5,\ldots}^{\infty} \frac{4V_s}{n\pi\sqrt{R^2+(n\omega L)^2}} \sin(n\omega t - \theta_n)} \quad (11)$$

Where $\mathbf{\theta_n = \tan^{-1}(n\omega L/R)}$

Neglecting any losses, the instantaneous power balance gives, $\mathbf{v_s(t)i_s(t) = v_o(t)i_o(t)}$

For inductive load and relatively high-switching frequencies, the load current $\mathbf{i_o}$ and the output voltage may be assumed sinusoidal. Because the dc supply voltage remains constant $\mathbf{v_s(t) = v_s}$, we get

$$\mathbf{i_s(t) = \frac{1}{V_s}\sqrt{2V_{01}\sin(\omega t)}\sqrt{2I_o\sin(\omega t - \theta_1)}}$$ which can be simplified to find the dc supply current as $\mathbf{i_s(t) = \frac{V_{01}}{V_s} I_0 \cos(\theta_1) - \frac{V_{01}}{V_s} I_0 \cos(2\omega t - \theta_1)}$ (12)

Where
$\mathbf{V_{01}}$is the fundamental rms output voltage
$\mathbf{I_o}$is the rms load current
$\mathbf{\theta_1}$is the load impedance angle at the fundamental frequency.

Equation (8) indicates the presence of a second-order harmonic of the same order of magnitude as the dc supply current.

Total harmonic distortion (THD) is the measure of closeness in shape between a waveform and its fundamental component, is defined as

$$\mathbf{THD = \frac{1}{V_{01}}\left(\sum_{n=2,3,\ldots}^{\infty} V_{on}^2\right)^{1/2}} \quad (13)$$

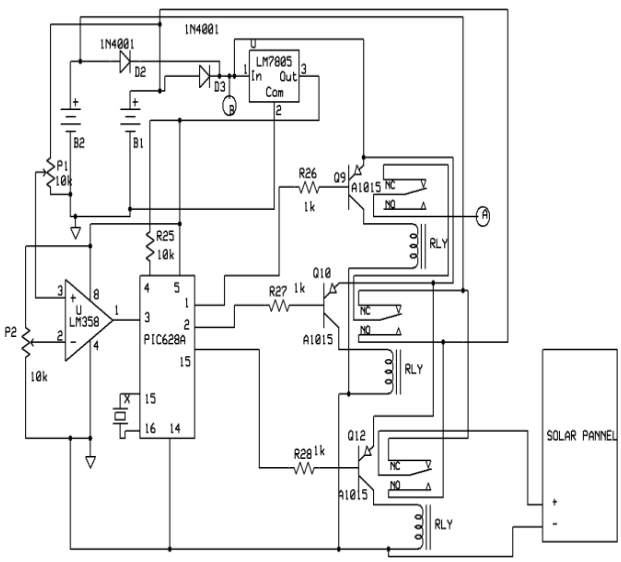

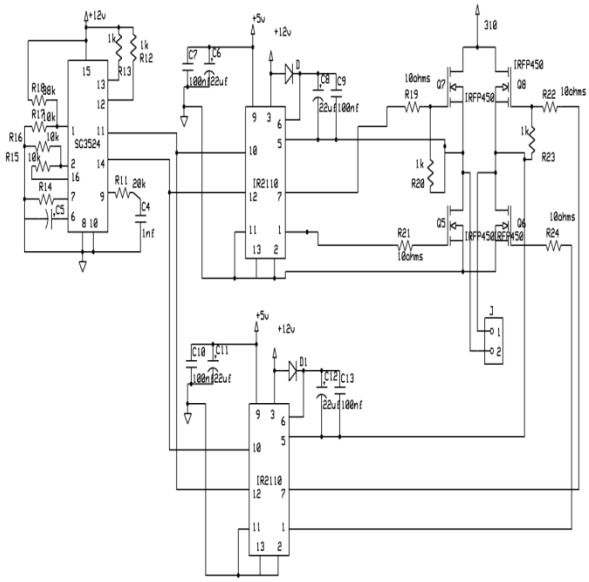

Figure 5. circuit diagram of the inverter system.

Distortion factor (DF) is the measure of effectiveness in reducing unwanted harmonics without having to specify the values of a second-order load filter and is defined as

$$\mathbf{DF = \frac{1}{V_{01}}\left[\sum_{n=2,3,\ldots}^{\infty}\left(\frac{V_{on}}{n^2}\right)^2\right]^{1/2}} \quad (14)$$

Meanwhile the DF of an individual or n^{th} harmonic component is defined as

$$\mathbf{DF_n = \frac{V_{on}}{V_{01}n^2} \quad for\ n > 1} \quad (15)$$

4. Inverter design specifications

The specifications for the design are as follows:

- Output Voltage = 220V
- Fixed Output frequency = 50Hz
- Power rating S= 625VA
- Input DC Voltage = 12V
- Efficiency at full load current of 90%.
- Maximum Load Current at input =52A

5. Remote control unit

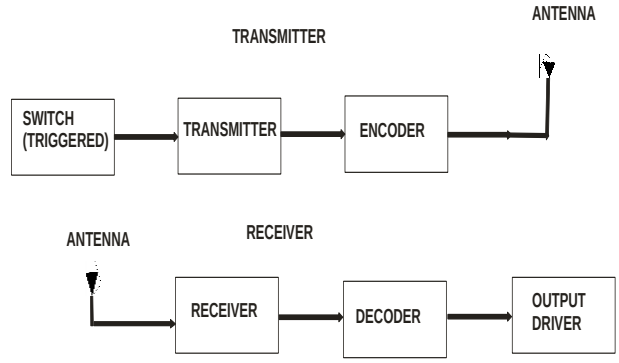

Figure 6. Block diagram of transmitter and receiver system.

This was achieved through the use of radio frequency (RF) module 355MHz; this was done to ease operation. This unit employs the use of HT12E as encoder and HT12D as decoder. They are used to encode and decode messages.

The wavelength of the propagated signal when a traveling wave moves during one period of the cycle can be expressed as;

$$\lambda = \mathbf{\frac{2\pi}{\beta} = \frac{2\pi}{k} = \frac{V_p}{f}} \quad (16)$$

$\mathbf{\beta = \omega\sqrt{LC} = 2\pi/\lambda}$, phase constant
k = $\omega\sqrt{\mu\varepsilon}$ =$\mathbf{2\pi/\lambda}$, wave number
$\mathbf{V_p}$= velocity of propagation [m/s]

f = frequency [Hz]

6. Experimental Result

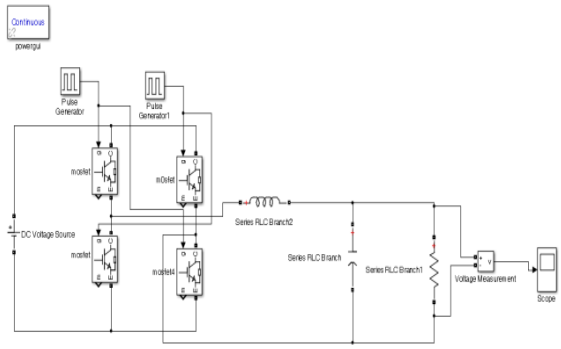

Figure 7. Simulink model of the system.

The simulations were done in MATLAB Simulink. The Switching frequency was set to 60 kHz. In order to simplify the simulation with the following parameters are shown below.

Voltage = 12 V d.c
Pulse generator:
Amplitude = 1V
Period (secs) = 1e-5 sec
Pulse width (% of period) = 50%
Phase delay (secs) =2.5e-5
Capacitor = 500uF
R load =1 ohms
L load = 1e-3 H

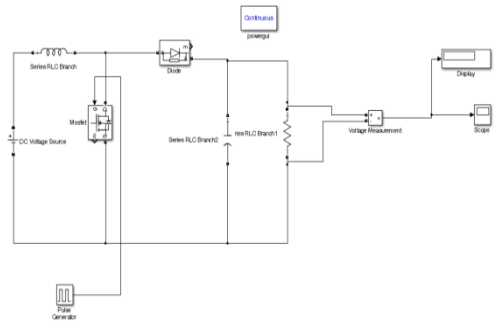

Figure 8. Simulink model of DC chopper.

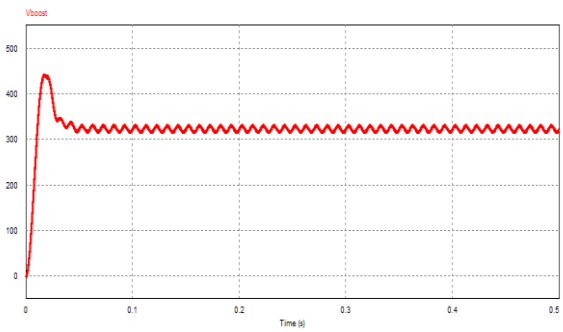

Figure 9. output waveform of DC-DC converter.

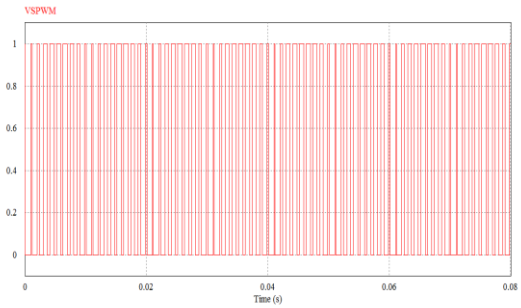

Figure 10. SPWM signal for switching.

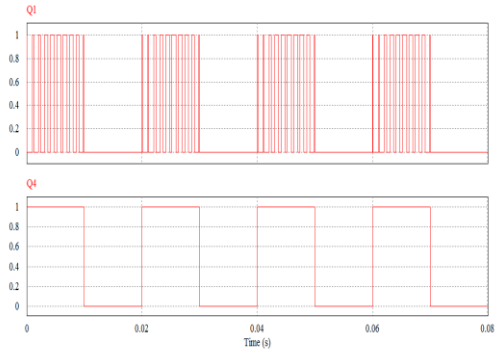

Figure 11. Switching signal from control circuit to MOSFETs Q1 and Q4.

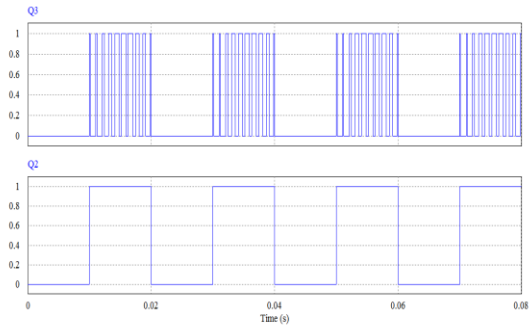

Figure 12. Switching signal from control circuit to MOSFETs Q2 and Q3.

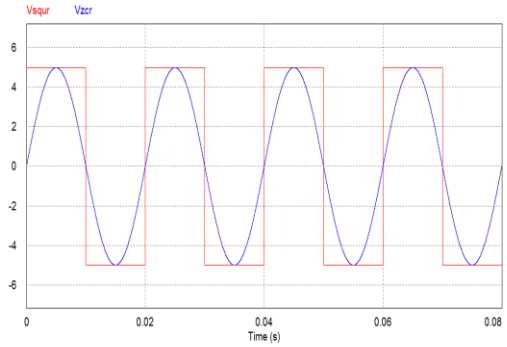

Figure 13. Zero crossing detection of Voltage.

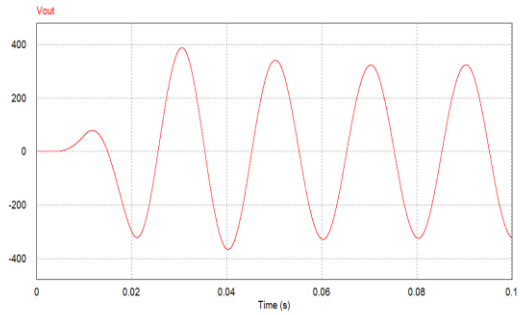

Figure 14. Output voltage after filtering.

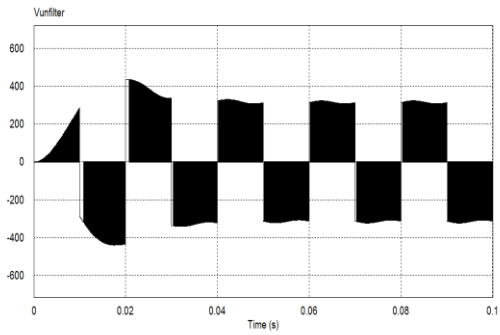

Figure 15. Output voltage waveform without filtering.

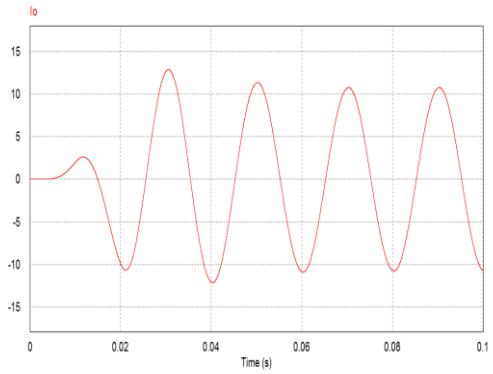

Figure 16. Output Current waveform.

7. Discussion of Result

MOSFET IRF 3205 was used because of its ability to handle high current at high switching rate. It also has low drain source resistance which is about 0.08 ohms. This is to ensure minimum waste of power. A push pull topology was used due to its high power handling capability. A step up voltage of 12V to 310V high frequency transformer also known as boost chopper was used to boost the voltage.

Figure 9 shows a 12V to 310V output from DC-DC converter. Is,

Figure 10 shows the square waveform at the frequency of 50 Hz.

The switching of each group (S1 and S2 or S3 and S4), are such that the two groups operate in different modes ('on' or 'off'). The output voltage is zero when the shift angle is zero and maximal when the shift angle is π. The gate pulses for switching of inverter are illustrated in Figure 11 and Figure 12.

Figure 13 shows the zero crossing phase detector waveform used with the gate signal. Hence phase detection of inverter output is ensured through zero crossing detection. The inverter output voltage is 310Vpeak-to-peak or 220V RMS.

Figure 14 shows the simulated output voltage waveform that is non-sinusoidal which is distorted, contains excessive harmonics. Thus, a low pass capacitor filter is employed at the output terminal of the inverter to reduce the harmonics.

The converter output was fed into H-bridge which is used to generate ac voltage. PIC16F628A microcontroller was used to generate a SPWM after filtering. 220V (RMS), 50Hz pure sine wave output voltage and current waveform as shown in figures 15 and 16.

From figure.16, the proposed design helps the output voltage and current to become stable after the first cycle with pure, neat and clean sinusoidal waveforms with low THD.

A decoder (HT12D) and Encoder (HT12E) are also used to control the switching states of the inverter system at a distance of 10m. This remote control sensor makes it easier and more convenient to switch ON/OFF the system when compared to other solar systems.

Furthermore, as the load increases, the voltage decreases. From table 1, below, load rating stops at 500W because going beyond that will cause overloading of the system.

Table 1. Load rating.

Load rating (W)	Voltage (V)	Current(A)
100	220	17
200	218	19
300	199	20

Figure 17 shows Harmonic profile of an inverter output, THD is minimized to 0.64 and the odd harmonic content in the output is also reduced leading to increase in efficiency.

From simulation results it is clear that system with less THD and light weight can be implemented.

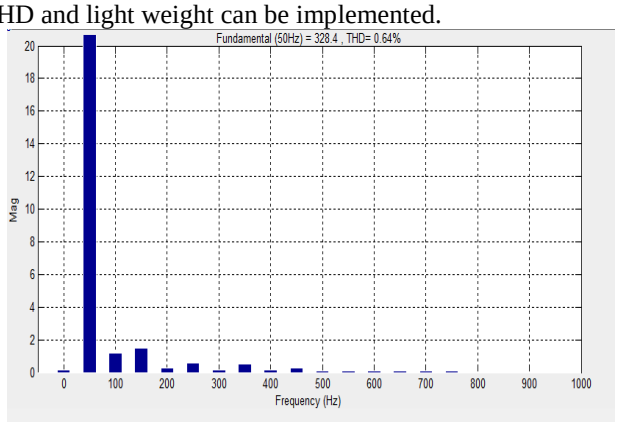

Figure 17. Harmonic profile of inverter system.

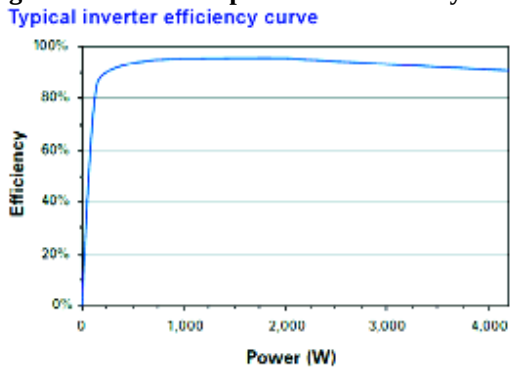

Figure 18. Efficiency of the inverter system.

Figure 18 shows that the maximum efficiency of 90% the flat efficiency curve is able to yield higher energy from the PV module during periods when sunlight is fading. The residential voltage discharge time of the proposed converter is 480 milliseconds, which prevents any potential electrical injuries to humans.

Conclusion

A dc–ac voltage source converter has been proposed and studied both theoretically and experimentally. According to the findings, the boost inverter is suitable for applications where the output ac voltage needs to be larger than the dc input and can offer economic and technical advantages over the conventional VSI. The results indicate that high step up DC-AC converter is capable of stepping up the voltage from 12V DC to 220V AC.

In this paper, the implementation of a microcontroller based stand-alone, transformer-less PV power system is presented. The PIC16F628A microcontrollers have been employed to implement the control scheme for the complete standalone PV power-system with a dual battery changeover system. The inverter can be remotely controlled at a distance of 10m. One of the advantages of this system is the reduction of total harmonic distortion {THD} of output voltage to less than 1%, reducing the hardware and the converter can be used for low current rated loads with various load rating of 100W, 200W and 300W with a better efficiency when compared to those inverters that have a galvanic isolation.

The simulation results obtained were quite satisfactory and the frequency obtained was in line with the grid. A pure sinusoidal output waveform was obtained and the output current did not change with the change in the load impedance. The proposed inverter is suitable for constant current load or

a dynamic load. The proposed inverter circuit proved that it is a highly efficient and cost effective product for renewable energy system.

References

[1] J.B Gupta , A Course in Electrical power, 15th Ed New Delhi:.S.K Kataria & Sons.2013 pp129-170

[2] T.S Chandra , M.L.S Deva Kumar and Viyaja Kumar."Design of transformer less single phase inverter for Renewable Energy based Distribution Generation system." International Journal of Science Research, vol.4,Issue 7, 2015

[3] M.H Rashid, Power Electronics, Circuits, Devices, and Applications, 3rd Ed.New Delhi: Prentice-Hall of India Private Limited, 2007 pp.253-256.

[4] S. B. Kjaer, J. K. Pedersen, and F.Blaabjerg, "A review of single-phase Grid-Connected Inverters for Photovoltaic Modules,"IEEE Transactions on IndustryApplications, vol. 41, pp. 1292-1306, September/October 2005.

[5] V.Jagannathan., Power Electronics: Devices and Circuits. 4th Ed. New Delhi: Asoke K. Ghosh. 2011pp.90-112

[6] A.I Gabriel, Principles of Communication Engineering, 1st Ed Makurdi (2005) Aboki publishers 1-5.