DEVELOPMENT OF A MANURE SPREADER

BY

ISTIFANUS MALAMI BASHIRI

M. ENG/SEET/98/99/213

THESIS SUBMITTED TO

THE DEPARTMENT OF AGRICULTURAL ENGINEERING IN PARTIAL FULFILMENT OF THE REQUIREMENT FOR THE AWARD OF THE DEGREE OF MASTERS IN AGRICULTURAL ENGINEERING FEDERAL UNIVERSITY OF TECHNOLOGY MINNA

OCTOBER, 2001.

DECLARATION

I declare that the work in this thesis represents my original work and has not been submitted for any Degree to any Institution. Authors whose works are cited have been duly acknowledged.

ISTIFANUS MALAMI BASHIR

NAME OF CANDIDATE

SIGNATURE

DATE

CERTIFICATE OF APPROVAL

This thesis titled Development of a Manure Spreader meets the regulations governing the award of Degree of Masters in Engineering Federal University of Technology, Minna, and is approved for its contribution to knowledge and literary presentation.

21.01.2002

DR. D. ADGIDZI — **DATE**

Supervisor

21.01.2002

DR. D. ADGIDZI — **DATE**

Head of Department

EXTERNAL EXAMINER — DATE

for the rate of application, field capacity, uniformity of spreading and efficiency of discharge and the values obtained are 5.857 tons/ha, 0.597 ha hr, 10.34% and 86% respectively. The results so obtained are satisfactory for a prototype design. It is recommended that further work is undertaken to improve on its performance, so that a bigger capacity machine can be produced.

ACKNOWLEDGEMENT

In a write up like this, it is impossible to acknowledge all those who contributed to the success of the work, however, I wish to acknowledge the special contributions of the following.

My greatest thanks go to the Almighty God through his son our Lord Jesus Christ who has been keeping my life in all endeavours to the present moment.

My special gratitude goes to my project supervisor Dr. D. Adgidzi for his invaluable contribution in terms of advice and going through the manuscript without which the work could not have been completed.

I wish to also thank the former Head of Department Dr. M. G. Yisa and other departmental Staff for their contribution in one way or the other toward the completion of the project.

I wish to similarly extend my gratitude to my Head of Department at Kaduna Polytechnic Mr. E. E. Fyada and my other colleagues for their support both morally and financially during the project work. My very special thanks go to Messers Olutimayin, Emmanuel, Martins, Felix and all other workshop staff who were ever ready to assist me during the construction of the project.

I am also indebted to my colleagues, Gabriel S. Kolo, F. A. Dakogol, Hayatu, Jonathan Shiru and Ndace whose advice and criticism lead to the successful completion on the project.

I wish to also extend my gratitude to Joachim O. Daudu who assisted me in terms of advice as well as continuously working together with me which led to a successful completion of the project.

In conclusion, I sincerely acknowledge all those who contributed in one way or the other toward the successful completion at this project work.

Bashiri, I.M.

DEDICATION

This work is dedicated to my late father, Mr. Malami Bashiri and mother Mrs :. Estira Malami who gave me the educational foundation that brought me to my present position

TABLE OF CONTENT

CHAPTER THREE

CHAPTER FOUR

CHAPTER FIVE

LIST OF FIGURES

LIST OF TABLES

LIST OF PLATES

LIST OF SYMBOLS

Mm	Millimeter
M	Meter
Km	Kilometer
Ha	Hectare
g	Grammes
Kg	Kilogramme
ρ	Density
pH	Bulk density (kg/m^3)
V_H	Specific volume m^3/kg
F_H	Coefficient of friction
Ψ	Angle of Repose
Mc	Moisture content (%)
P	Power (Kw)
RPm	Revolution per minute
Q	Capacity (kg/min)
Dbp	Drawbar power (Kw)
E	Elastic Modulus (GN/m^2)
I	Moment of inertia (m^4)
π	Phi
D	Shaft angle
B	Cone angle
α	Pitch angle
M_t	Moment toque (Nm)
αs	Dynamic load (N)
Mb	Maximum bending moment (Nm)

Kb	Shock fatique
S	Allowable stress MN/m2
C	Field capacity [ha/hr]
Ln	Rating life in revolution (N)
Lh	Rating life in hours (hr)
P_{cr}	Critical load (N)
W	Width of swath (m)
Cv	Coefficient of variation
N	Newton
Hr	Hour

CHAPTER ONE

1.0 INTRODUCTION

One of the many functions of soil is it's primary function of serving as a medium of plant growth. The ability of soil to support any plant is determined by its fertility. A fertile soil is therefore defined as any soil that can supply most of the nutrients required for the healthy growth of the plant.

However, continuous cropping on the same piece of land leads to the depletion of the essential plant nutrients. For that land to continue to be productive, the lost nutrients must be replenished. The age long method of replenishing plant nutrients include the addition of crop residue, farm yard manure, compost, green manure and other forms of organic materials.

These materials once applied decompose and form part of the soil which according to a Archer (1996), form the top 25cm of the soil. These help in modifying soil physical properties strongly affecting its chemical and biological properties. They also help in acting as nitrogen reservoir, furnish large portions of the soil phosphorus and sulphur, protect soil against erosion, supply the cementing substances for desirable aggregate formation and loosen up the soil to provide better aeration and water movement.

As desirable as organic manure is, its use has been abandoned in the developing countries due to the labour involved in its handling due to the absence of handling machines, and also largely due to the introduction of chemical fertilizer which is easier to handle.

Despite the introduction of chemical fertilizer, the developed countries of America, Britain and others have continued to use farm yard manure. It is in line with this that Green (1979) reported that, despite the growth of the fertilizer industry, farm yard manure is still one of the mainstay of British crop production and is worth all the care and attention which can be bestowed upon it. Similarly Archer (1996) also reported that due to the increasing cost of chemical fertilizer and new Federal and State environmental laws, a renewed focus has been directed at the centuries old practice of addition of animal dung to cultivated land. These countries have been able to sustain the use of animal manure due to the availability of machinery for its handling and application.

The problem why developing countries like Nigeria have abandoned the use of animal manure as stated above is due to the un-availability of machine or their high cost. A market survey in Kaduna revealed, that none of the major Agricultural machinery dealers sell manure spreaders which is as a result of low or no patronage due to their high cost.

To encourage the use of this animal manure which is lying waste in many abattoirs in the major cities and Fulani settlements as revealed by the research carried out in Kaduna, Local manure handling and application machinery must be developed. It is in line with this that the design and construction of this simple manure spreader is being embarked upon. It is hoped that when completed, the average farmers will be able to purchase and use the machine for increased productivity.

1.1 OBJECTIVES OF THE PROJECT

In any design work, there are objectives which are expected to be achieved. For the manure spreader under design, the following objectives are expected to be achieved.

i) To design a manure spreader

ii) To fabricate the machine using locally available materials

iii) To test the performance of the machine.

1.2 JUSTIFICATION OF THE PROJECT

It is an acceptable fact that a lot of manure spreaders have been developed and are in the market. Infact most of them have reached very high levels of sophistication, therefore, there would have been no need embarking on the development of another type of manure spreader.

However, in the cause of these research, it was discovered that manure spreaders available in the market are not being patronised as a result of there high cost. Again, the Federal Government of Nigeria recently removed subsidy on chemical fertilizers making it too costly for the average farmer to buy. A survey carried out in Kaduna revealed that several tons of animal dung are laying waste in the major abattoirs in the cities constituting environmental hazards. (Plates I, II, III.).

Therefore the development of a simple manure spreader like the one in this project became imperative because

1. It will be affordable by the average farmer and so encourage the use of animal manure which has more beneficial effect on the soil and crop than chemical fertilizer.
2. It will improve the sanitary condition of our abattoirs as the animal dung dumps will be cleared for use on the farm.
3. It will reduce the labour involved in manual application of manure which is very laborious as reported by Stonc and Gulvin (1977) that "if you have spread manure by hand, then you will agree that the manure spreader is the best labour saving machine".

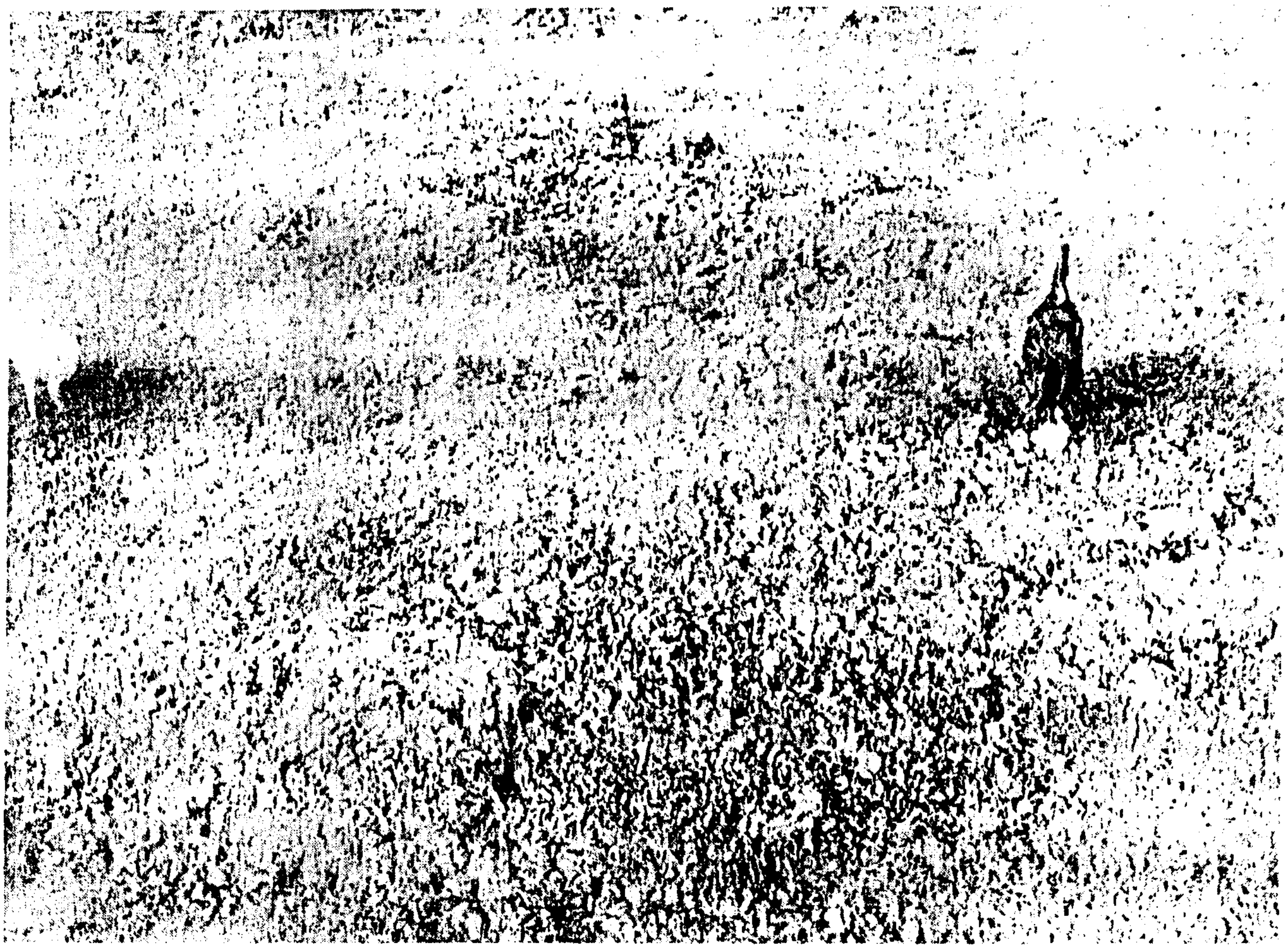

Plate I Fresh Cow Dung at Tudun Wada Abattoir, Kaduna.

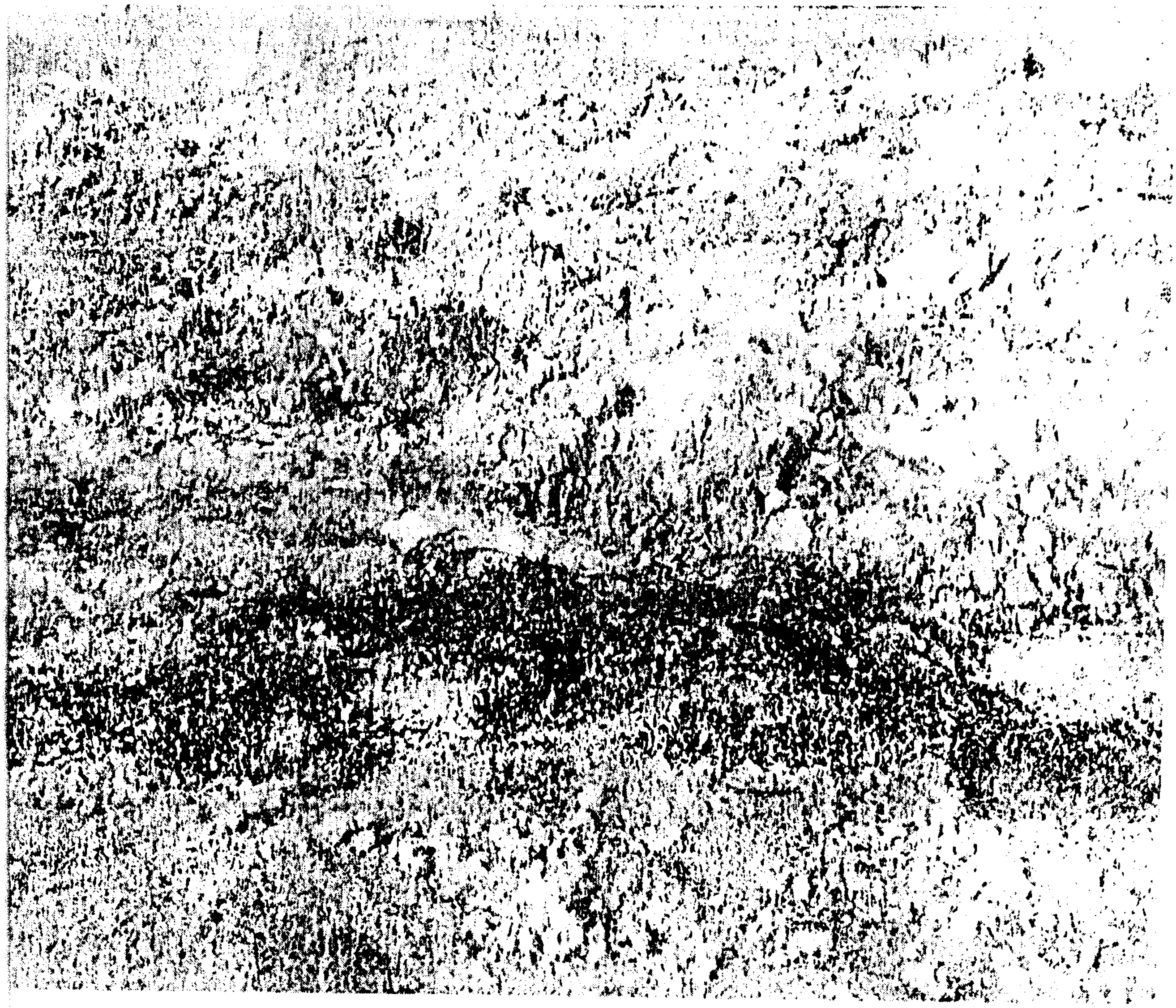

Plate II Decomposing Cow Dung Dump at Kakuri Abattoir, Kaduna

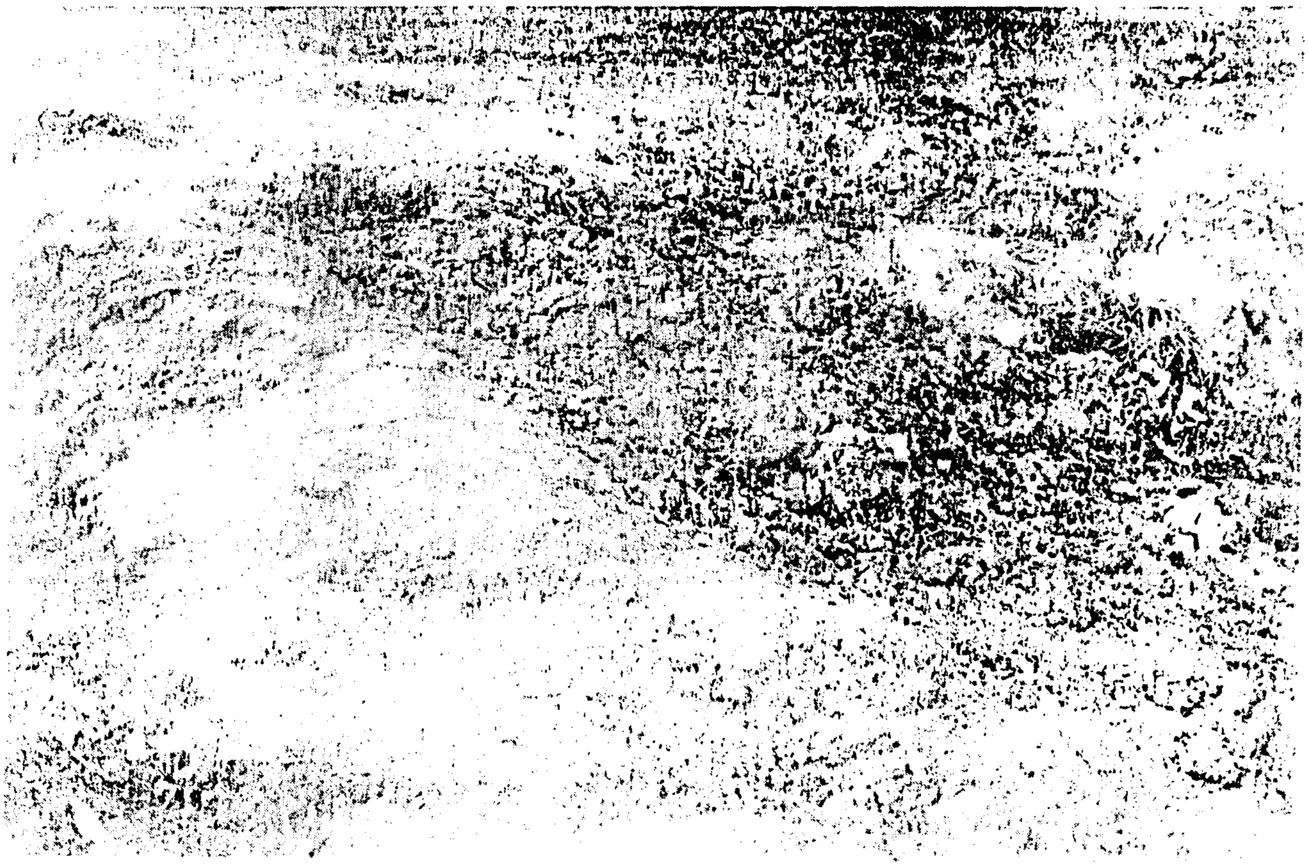

Plate III Decomposing Cow Dung Dump at Kawo Abattoir, Kaduna.

CHAPTER TWO

2.0 LITERATURE REVIEW

2.1 MANURE

Organic manure comprises mainly of crop residue, from yard manure, sludge, night soil and other forms of organic materials (Green 1979). All these forms of manure are applied in order to replenish or increase the fertility of the soil.

2.2 METHOD OF APPLICATION TO THE SOIL

The two major methods of applying manure to the soil are the manual method and the machine method.

2.2.1 MANUAL METHOD

Manual application is the earliest form of applying fertilizer to the soil. In this method the fertilizer is applied using the hand either by scattering or by placement close to the plant. Although this method is very effective, it is very laborious and can only be used where the Land area is small. This method is still in practice by the small holder farmer with small plots of land.

2.2.2 MACHINE APPLICATION

Advancement in technology has brought about the development of different machines for the application of both chemical and organic manure. The development of this machine brought about the cultivation of larger land areas as the drudgery involved in manual application is reduced leading to increased productivity.

2.3 MANURE SPREADERS

Manure has been the main source of plant nutrient and was majorly applied manually. With the advancement in technology, machines or equipment for the application were developed.

According to Stone and Gulvin (1977), a wagon type spreader was invented in 1865 by Joseph Kemp whose patent for the first mechanical spreader were purchased by John Deere and company. In 1877, the endless apron or conveyor was used on the first commercial spreader. Since then, manure spreaders have been widely used for carrying manure to the field shredding and spreading it uniformly over the land. The spreader is labour saving and efficient and does a better job of distribution than can be done by hand.

2.3.1. TYPES OF MANURE SPREADERS

There is quite a wide range of makes of manure spreaders in the market. Though some may be similar in appearance, they possess important variations in the design of the their components. Manure spreaders can be classified according to their driving method namely ground driven and P. T. O. driven.

According to Smith and Wilkes (1980), the mechanism of a ground driven manure spreader is operated by sprockets and chain from the wheel supporting the spreader with the traction (ground driven) spreader, the tractor wheels must pull the load and produce enough force to turn the spreader wheels, that places all the forces on the tractor tires which in many instances slip on wet or icy slopes. With the P. T. O. spreader, the tractor rear wheels pull only the load while the spreader parts are rotated directly by the tractor engine through the P. T. O. universal point (Stone and Gulvin, 1977).

Further more. the P. T. O. spreader does not depend on ground speed for a change in spreading rate. actually it can spread while standing still.

The following are the major types of manure spreaders which are popularly used.

i) Trailer type manure spreader

ii) Rotary manure spreader

iii) Field heap manure spreader

iv) Liquid manure tanker.

2.3.1.1 TRAILER TYPE MANURE SPREADER

The trailer type manure spreader. Is the most widely used equipment It has one set of wheels. The front of the load is carried on the tractor draw bar thus furnishing the tractor with added traction (Stone and Gulvin 1977). The principal components of the manure spreader are the frame. the box. the conveyor and the widespread.

a) THE FRAME

Since manure is very heavy and at least 1000kg or more is loaded on the spreader for each trip to the field or substantial yet comparatively light frame is required. The side rails on all spreaders should be made of a good grade channel steel properly reinforced and braced (Smith and Wilkes. 1980).

b) **CHASSIS AND BODY**

The chassis and the frame according to Lovegrove (1968) are generally made in one unit forming a robust two wheel trailer with front and side panels. At the rear of the body, two side cheeks are fitted to accommodate the spreading mechanism. The construction is either all steel or steel frame with wooden bottom and sides. The steel work is usually treated against corrosion and the wood work is pricked in creasote to check rotting.

The capacity of the body may be anything between 60 and 120 bushels (i.e. $1^1/_2$ to 3 tons) approximately. The wheels of the spreader are always well back to transfer some of the loaded weight on the rear of the tractor to improve wheel adhesion. (Lovegrove, 1968). Large section tyres are used to improve floatation on soft ground and their large diameter ensures good ground clearance under the axle.

c) **THE CONVEYOR**

The manure in the box is moved to the rear by an endless double chain and slat conveyor or apron. The angle iron bar used for the conveyor slate are riveted to the chain with the outside leg or high side facing to the rear of the box. (Smith and Wilkes, 1980). The manure is deposited in the box on the conveyor, then as the conveyor moves, it carries the manure with it to the rear of the machine where it comes in contact with the beater.

d. **SPIRAL SPREADER**

The spiral spreader is a left hand and right hand auger which revolves at high speed and scatters the manure evenly over a wide strip of land. On machines having only one shredding beaters, the spiral usually has blades or tines attached to it to lacerate and chop the material as it is distributed.

e. **SHREDDING BEATERS**

Machines may have one, two or even three shredding beaters, they are cylindrical assemblies made up of rake-bars, each carrying a number of tines. If there are more than one, they may be designed to rotate at slightly different speeds. The function of the beater is to tear apart lumps of manure, to ensure a constant and even delivery to the spiral spreader.

f. **SYSTEM OF DRIVE**

Both P. T. O. driven and ground wheel driven machines are available. The tyre of ground driven machines have land grip treads capable of providing all the power necessary when traction conditions are good.

The beaters and the spreader are driven by chains and the intermittent conveyor motion where required is achieved by means of ratchet and pawl mechanism. Slip clutches designed to prevent over load of working parts are fitted to most machines either as one master clutch or as more desirable individually on each principal shaft. (Plate IV).

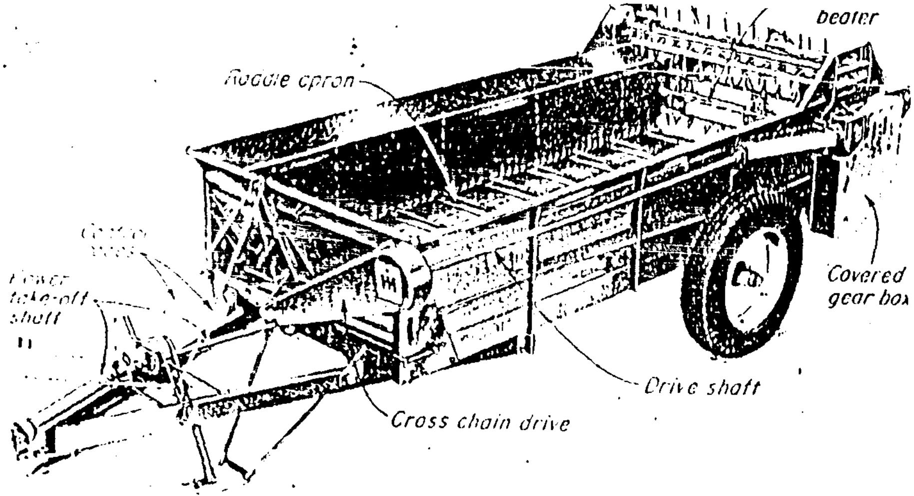

Plate IV Trailer type Manure Spreader
(Smith & Wilkes 1980)

2.3.12 ROTARY SPREADER

This is a departure from the conventional type of trailer spreader. It has a watertight cylindrical container, the contents of which are discharged by revolving chain of flails carried on a common spindle and powered by the tractor P. T. O. (Lovegrove 1968). This design has a number of advantages.

It can handle both solid and liquid manure

It achieves a high degree of pulverization of the solid manure

It gives a constant spread

It simplicity of design makes for reliability and the minimum of maintenance requirements. (Plate V)

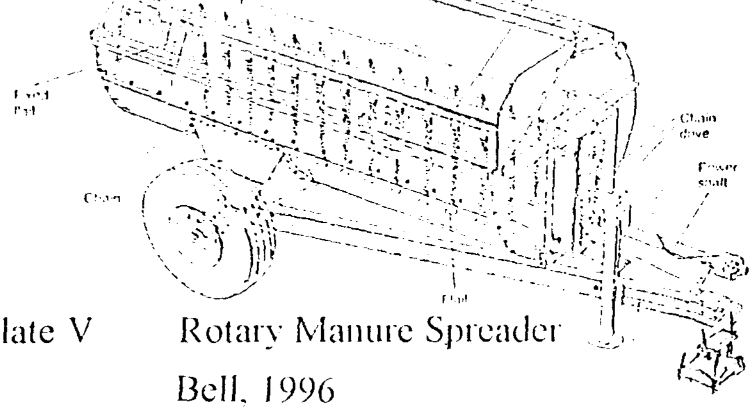

Plate V Rotary Manure Spreader
Bell, 1996

2.3.1.3 HEAP MANURE SPREADER

Lovegrove (1968) described heap spreader as relatively cheap and successful in handling the manure spreading problems of small farms.

A heap spreader is usually a mounted or semi-mounted power driven machines employing the same basic principles as the spreading mechanism of a trailer spreader.

The manure must first be moved from the yard building or heap to the field and deposited in small heaps at regular intervals in rows 360 – 450mm apart. The spreading out fit is then driven down the rows shredding the heaps, as with tractor type machine, a shredding beater disintegrate the material and spiral spreader distributes it. (Plate VI).

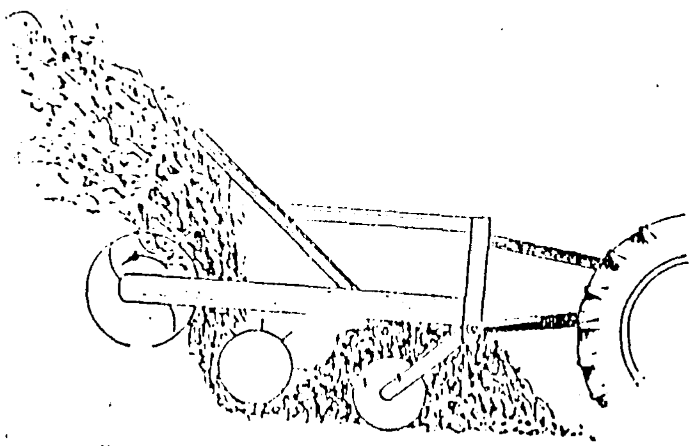

Plate VI Field Heap Manure Spreader
(Lovegrove 1968)

2.3.1.4 LIQUID MANURE SPREADER

Tankers for liquid manure are available as large capacity models ranging from 800 – 1200 litres or small models designed for mounting on the three point linkage of tractor. The tank is galvanised or loaded internally with an anti-corrosive substance.

The liquid manure is transferred from its collecting sump into the mobile tank either by suction achieved with a vacuum pump or by a centrifugal pump, both which are available for tractor P. T. O drive. The liquid in subsequently discharged from the tank on to a splash plate or rotating distributing disc with the outfit in motion. The timing of the operation and rate of application must be right if full benefit is to be obtained from its material value, care is necessary also to avoid scorching of crops or grassland by overdosing with nitrogen rich liquid. (Plate VII).

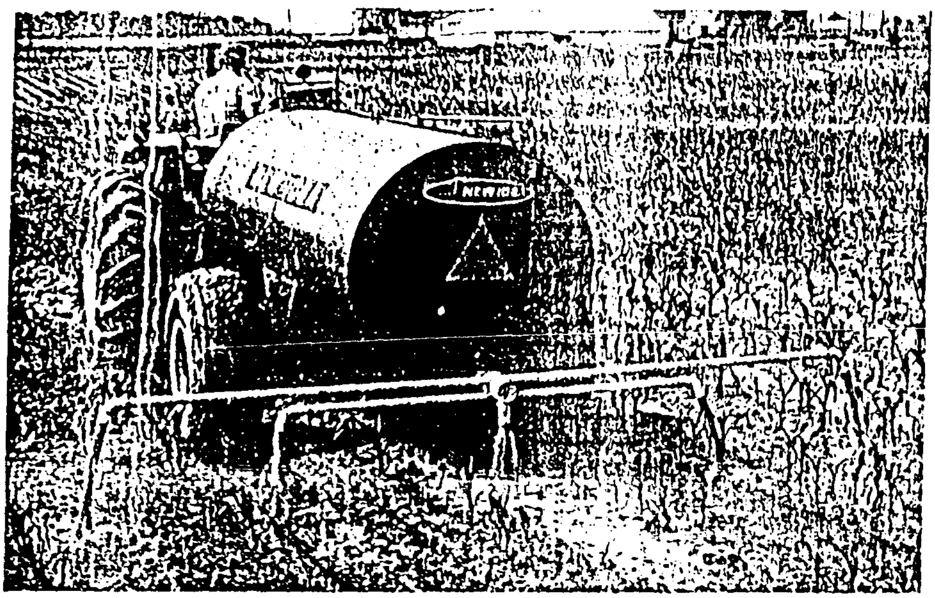

Plate VII Liquid Manure Spreader.

Smith & Wilkes, 1980

CHAPTER THREE

3.0 METHODOLOGY

In order to obtain the correct data for the design of the mach investigations were conducted into the properties of manure wl produced the data necessary for the design of the machine. starting point of the research was the determination of the:

a) Population of animals in Nigeria

b) Amount of dung produced by the animals

3.1 POPULATION OF ANIMALS IN NIGERIA

Knowing the population of animals in Nigeria will help determining the amount of dung produced by animals.

In order to accomplish this, a personal interview was conducted wi the National Livestock Production Division, Kaduna. The data Appendix A. was obtained and the summary is on Table 3.1 below.

Table 3.1 Animal Population in Nigeria

Type of animal	Population (Millions)
Cattle	13,761.000
Sheep	21,230.000
Goat	33,867.000
Horses	200,[illegible]
Camel	87,000
Pigs	3,367000
Chicken	71,164.000
All other poultry	29,937.000

Source: National Livestock Production Division Kaduna 1985

3.2 ANNUAL DUNG PRODUCTION

Having known the population of animal in the country, the amount of dung produced daily or annually by each category of animal was determined. Geoffrey and Kristopherson (1985) reported that the quantity of dung produced by an animal depend on a number of factors such as the species and size of the animal, the quantity of food consumed and the amount and nature of housing or confinement of the animal. When comparism is made on the basis of dung produced per weight of animal, the production is remarkably similar from one animal to the other. An example given by Raymond and Roy, (1992) showed that cattle void 101.944 tons of dung annually while Ulysses (1985) reported that mature beef cow void, about 31.8kg of excrement daily. Geoffrey and Kristopherson (1985) gave the following data as the amount of dung produced annually per kg live weight of the animals.

Table 3.2 Amount of dung produced annually per kg live weight.

Animal	Ann. D. prd. (kg)	Av. (kg)
Horse	0.3 – 0.8	0.55
Chicken	0.06 – 0.12	0.09
Cattle	0.5 – 7.2	1.10
Pig	0.2 – 0.3	0.25
Sheep	0.1 – 0.2	0.15
Goat		

Source: Godffrey and Kristopherson, 1985.

3.2.1 QUANTITY OF DUNG PRODUCED BY ANIMALS

Table 3.2 gives the annual production of dung by animals and table 3.1 gives the total population of animals. Multiplying this two gives an approximate quantity of dung produced in Nigeria by each category of animal. (Table 3.3).

Table 3.3 Annual Dung Production

	Animal	Population (mill)	Dung produced Tons/annum	Total dung tons/annum.
1.	Cattle	13,761,000	1.10	15137100
2.	Sheep	21,230,000	0.15	3184500
3.	Goat	33,867,000	0.15	5080050
4.	Horse	200,000	0.55	110000
5.	Carmel	87,000	0.80	67600
6.	Pigs	3,367,000	0.25	841780
7.	Chicken	71,164,000	0.09	610,4760
	Total			**30825760**

3.3 DUNG FROM THE ABATTOIRS

The second major source of obtaining animal dung for use on the fa... is from the abattoirs or slaughter houses. A lot of this dung is produced at the abattoirs in the townships, but are not utilised due to the absence of handling equipment. Plates I, II, and III, are animal dung piled at three of the main abattoirs in Kaduna.

An investigation was carried out in the three abattoirs to determine the number of animals slaughtered daily and the amount of dung produced, the following results were obtained.

Table 3.4 Monthly Dung Production at T/Wada Abattoir

Animal	No./Month	Amount of Dung/animal (kg)	Amount of dung per month (kg
Cattle	278	4.23	1175.94
Carmel	13	3.68	47.84
Sheep	123	1.37	168.51
Goat	96	1.22	117.12
Total	**360**	**10.50**	**1509.41**

Table 3.5 Monthly Dung Production at Kakuri Abattoir

Animal	No./Month	Amount of Dung/animal (kg)	Amount of dung per month (kg
Cattle	132	4.23	555.50
Carmel	9	3.68	33.12
Sheep	96	1.22	117.12
Goat	123	1.37	168.55
Total	**360**	**10.50**	**877.25**

Table 3.6 Monthly Dung Production at Kawo Abattoir

Animal	No./Month	Amount of Dung/animal (kg)	Amount of dung per month (kg
Cattle	289	4.23	1222.47
Carmel	17	3.68	62.58
Sheep	256	1.37	350.72
Goat	179	1.22	218.38
Total	**174**	**10.50**	**1854.413**

Amount of dung produced by the three abattoirs =

= 1509.41 + 877.25 + 1854 + 413 = 4241.107 kg/month

= 4241.107 x 12 = 50892.876 kg/annum.

∴ Annual dung production = 50892.876 kg

= 50.892 tons.

3.4 PROCESSING OF COW DUNG

Cow dung (manure) can be applied to the soil in fresh or decomposed form or made into a compost.

3.4.1 FRESH MANURE

Fresh manure can be moved daily from the animal shed to the field, this method has some undesirable effects like injuiring plants or the seeds due to the harmful ammonia fumes it releases, and also due to the heat it generates as a result of the decomposition taking place. Fresh manure can contain many weed seeds which will germinate and compete with the crops. It is therefore advisable that fresh manure should be applied 1 – 2 weeks in advance of planting or transplanting and thoroughly mixed with the top soil to avoid the possibility of plant injury and to kill weed seeds.

3.4.2 DECOMPOSITION OF ANIMAL DUNG

This is the system of leaving the manure under the animals till it is required for the field or moving it out and dumping in another place allowing it to decompose there before applying it to the fields.

3.4.2.1 PROCESS OF DECOMPOSITION

According to Green (1979), at the time of production, farm yard manure consists of a crude mixture of straw faeces and urine, commonly term long dung, but this at once begins to undergo various changes which result in it ultimately producing a very uniform material in which many of the original differences of composition due to type of animal richness of food amount and nature of letter have been considerably mitigated if not obliterated.

A lot of changes take place in a manure heap under suitable conditions of moisture and aeration. The most important chemical changes which take place in the manure heap are as follows:

1. The conversion of urea into ammonium compound
2. The fermentation of the carbohydrates of the litter and faeces with the production of heat. Various gases (such as carbondioxide, methane and hydrogen) and a decayed mass of organic matter richer in nitrogen and darker in colour than the original straw.
3. The breaking down of the protein of the litter and faeces into simple compounds of nitrogen such as ammonia.
4. The assimilation and fixing of nitrogen as protein in the bacteria.

These changes become manifest in the gradual disappearance of any recognisable structure, the whole heap tending to become uniform in texture and colour. The raw soluble compounds of nitrogen gradually disappear and drainage from the heap takes on a dark or black colour. This is "dung liquor" and its appearance is due to the presence of soluble compounds of ammonia and organic matter. When all these changes are well advanced, the heap is in the condition known as dung high liquor.

LONG DUNG STAGE

STRAW FAECES

Containing

URINE

Containing

CARBOHYDRATE AND PROTEIN

UREA (phosphoric acid)

Converted by Bacteria into

and Potash

CARBON DIOXIDE

AMMONIA (Soluble)

AMMONIA (Soluble)

F

Which may be lost by

gas in

fixed by Bacteria as dry conduction or

OTHER GASES

stable Nitrogen in drainage in

INSOLUBLE humus Compounds

SOLUBLE humus Compounds.

compounds wet condition

DUNG LIQUOR

SHORT DUNG STATE

Fig. 3.1 Decomposition process in a manure heap.

Though there are nitrogen losses during the process, as a rule is richer in nitrogen than the original components owing to the comparatively greater loss which fall on the non-nitrogenous constituents.

3.5 COMPOSTING OF ANIMAL DUNG

Animal dung when left under favourable conditions decomposes and form what is known as humus as has been described. Green (1979) reported that there is a reduction in the heap both as regards to total weight and amount of fertilizing constituent. This means that the quantity of humus obtained after decomposition is much less than the original materials.

Therefore, for a farmer to have enough organic manure for his farm especially if he has a limited number of animals or a limited supply of dung, other organic materials like crop residue, straw and leaves should be mixed with the dung and allowed to decompose to make what is known as compost.

Green (1979) reported on the work undertaken at Rothamsted compost in which it was discovered that compost made by building up a heap of straw layer by layer each of which was watered and given a sprinkling of chalk and by washing in nitrogenous fertilizer such as sulphate of ammonia, a complete rotting down of the heap produced a product which was very much like short dung, and which gave the same result on the field. He went further to recommend the replacement of animal dung with the compost especially where a farmer has few number of cattle.

3.5.1 PREPARATION OF COMPOST

Compost has been made in quite a variety of ways using a varied combination of materials depending on availability. The major raw materials for making compost are animal dung, straw, leaves, ash, urine and other decomposable organic materials. The end product of a properly decomposed compost is a fine powder called humus (Albert, et al, 1981)

Albert et at (1981) further stated that a partially rotted material cannot be incorporated into the pore spaces of the soil until further decay has taken place. The soil has to do a good deal of work before farmyard manure applied on the surface in lumps can be uniformly distributed through and incorporated into the soil mass.

The points to be considered and followed if compost is to be prepared based on scientific principles as reported by Albert et al (1981) are:-

1. All losses of nitrogen are to be avoided
2. The various steps from the raw materials to the finished product should follow a definite plan, based on orderly breaking down of the materials and preparation of finished product ready for nitrification which can easily be incorporated into the soil. At the same time, an attempt should be made to preserve as much nitrogen as possible by fixation from the atmosphere. An experimental compost was made for the purpose of designing this machine.

3.5.2 PREPARATION OF THE COMPOST HEAP

Compost can be made as heaps on land ideal for places where the rainfall is high and in pits in the ground where the rain fall is low or during dry season. The size of the compost depends on the size of the farmers land and the availability of the compost making materials.

Considering the fact that the compost being prepared is for experimental purpose, it will be the heap on the ground method which will be small in capacity.

3.5.2.1 TIME TABLE OF MAKING THE COMPOST

The time table below was drawn for the preparation of the compost which lasted for 90 days. This was adopted from the Indore method of compost making.

Table 3.7 Time Table for compost making

Day	Event
1.	Building of heap of begins
3.	Building of heap ends
10.	Fungus growth established
12.	First watering
16.	First turning compost inoculated with bacteria from an old compost
24.	Second watering
30.	Second turning
38.	Third watering
45.	Forth watering
60.	Third turning
67.	Fifth watering
75.	Six watering
90.	Removal to the field.

A. **PROCEDURE**

1. **Materials:** The following materials were collected for the preparation of the compost.

a. Cow dung from the abattoir

b. Ash

c. Grasses.

d. Water and air. Both air and water are needed for the compost process.

2. Building of the heap.

a. A suitable site was chosen. An area of 260 x 160cm was demarcated. Eight stakes were knocked into four corners of the land with two stakes positioned half way between the 260cm length dividing the land into two plots measuring 130cm x 80cm each.

b. First, elephant grass was laid at the base of the heap forming layer of about 10cm thick to allow for adequate circulation of air at the base of the heap, (Akinsanmi, 1975.)

c. Next, crop residue, grasses, leaves that have been chopped and properly mixed were laid as the second layer of the heap.

d. After that another layers of low dung and wood ash was spread over the crop residue layer. This was to accelerate the activities of decomposing micro-organisms such as fungi and bacteria.

e. This process was repeated until the heap was about 25cm high all round. The sides of the heap were lined with grass to prevent flies from getting into the compost (plate XI)

f. Water was then added all over the heap to the desired moisture content.

With all the materials in place, the building of the compost was completed within three days. Two sticks were pushed into the heap from the opposite directions at about half way the heap. These sticks are to be removed and tested to determine if decomposition is taking place as the sticks will be hot when touched, with all things being equal, the compost should be ready after three months.

3.5.2.2 TURNING OF THE COMPOST

To ensure uniform mixture and decay and to provide the necessary amount of water and air as well as a supply of suitable bacteria, it is necessary to turn the material two or three times (Albert et al 1981). Table 3.7 shows the time table for the making of the compost adopted from the Indore method of making compost.

a) **First Turning**

Between 16 and 17 days after the building of heap, the compost was turned. This involved the movement of the heap from the plot it w as built to the adjacent plot. The material at the top was transferred to the base. Compost from an old pit was added to help in introducing bacteria into the compost . The second watering was done 24 days after building the heap.

b) **Second Turning**

The second turning of the compost was done at about one month after the charge. The material (compost) was moved from the second plot to the first one. The materials should fall loosely when being moved so as to ensure copious aeration. The third and fourth watering were given five and six weeks after the building of the heap.

c) **Third Turning**

The third turning was undertaken at about two months after the beginning of the process. The material was moved from the first plot to the second plot, after which water was applied the fifth time and then the sixth about a week after.

3.5.2.3 QUANTITY OF WATER

From table 3.7, the compost was watered four times from the end of the heap building. Care was taken to make sure that only sufficient moisture was added to keep the average water content below 50% of complete saturation, so as to help the fungi establish themselves rapidly and strongly.

Too much free water tends to accumulate in the air spaces and hinder aeration. This checks the growth of fungi which thrives best if the total moisture is below 50%. Albert et al (1981) recommended that the moisture should be maintained between 50% and 60% (See moisture content determination) The average moisture content of ripe manure was found to be about 44%

3.5.2.4 AIR SUPPLY TO THE HEAP

The supply of air is perhaps the most critical factor in manure processing and requires a careful attention (Albert et al 1981). The first condition of success in obtaining a sufficient supply of oxygen and nitrogen for the micro-organisms is the use of mixed bedding which maintains an open texture throughout the process.

Following the above recommendation, in building the heap, the materials. (grasses. ash. cow dung and all other materials) were evenly spread. water was then sprinkled over the whole mass without trampling. Similarly, care was taken that no consolidation was made during turning.

3.5.2.5 TEMPERATURE OF THE HEAP

Temperature plays a very important role in the decomposition of the material by bacteria and fungi. Too high temperature and too low temperature is harmful to bacteria and fungi.

Albert et al (1981) reported that the activity of various micro-organisms is easily followed from temperature record. It was discovered that a high temperature of about 65^0c was established at the onset of processing which continued for a long time. This temperature was found to be optimum requirement for micro-organism to breakdown cellulose. The aerobic thermophylic bacteria thrives best between 43^0c and 63^0c and fungi between 40^0c and 50^0c. The thermometer was inserted into the heap for 24 hours every week and the temperature were read and recorded as in table 3.9. It started with a temperature of 60^0c and continues to drop as the process progressed to a minimum of 33^0c. The temperatures were taken weekly.

Table 3.8 Temperatures of the Heap

Week	1	2	3	4	5	6	7	8	9	10	11	12
Temperature α	62.5	60.0	59.0	53.4	49.6	49.0	48.7	36.0	34.2	33.8	33.2	33.0

The final temperature of the processed manure after ninety days was 33^0c

3.5.2.6. pH OF THE HEAP

In order to maintain the general reaction of the mass within the optimum range, a suitable base is necessary for neutralizing excessive acidity and the temporary absorption of any ammonia that may be given off during the process. The wood ash added to the heap took care of this.

A small quantity of manure was taken and dissolved in distilled water in a flask. It was mixed properly and left for 30 minutes. The pH meter was inserted and the readings taken and the result presented on Table 3.9.

Table 3.9 pH Of The Heap

S/No.	Stage	PH
1.	One day after completion of heap	7.2
2.	After first turn	7.4
3.	After second turn	7.5
4.	After third turn	7.6
5.	Ripe manure	7.7

3.5.2.7 CHARACTER AND PROPERTIES OF THE FINAL PRODUCT.

After ninety days of composting, the final product obtained was a blackish loosely lumpy materials ready for application on the farm. The fine state of division enables the compost to be rapidly incorporated and exert it maximum influence on a very large area of the internal surface of the soil.

The following properties of the final product were determined as they are necessary for the design of the manure spreader to handle it. Below are the required properties.

a) **Angle Of Repose (Angle Of Friction)**

Mohsenin (1978) defined angle of repose as the angle with the horizontal at which a granular material stand piled. This angle is influenced by size, shape, moisture content and orientation of particles.

The angle of repose of the processed manure was determined by adapting the method used by Mohsenin (1978) in which an adjustable table was used. 10 grammes of the manure was put into a container, placed on a tilted table, the table was raised until the manure began to fall, the angle of tilt was measured with a protractor and recorded this process was repeated ten times. (Table 3.12.)

Table 3.10 Readings of Angle of Repose

Sample	1	2	3	4	5	6	7	8	9	10
Angle	40.7^0	41.4^0	42.8^0	42^0	42.5^0	42.5^0	43^0	40^0	41.5^0	42.9^0

Average angle = 41.93^0

c) **Coefficient Of Friction**

The flow of manure out of the hopper depends on the Coefficient of friction between them. This was determined as follows

Tens cubes were made of the composted manure. Each was placed on an adjustable metal table and the table tilted until the cube just begins to slide, then the angle of tilt of the table to the horizontal was measured and result entered on Table 3.11 below

Table 3.11 Readings of limiting angles of friction.

Sample	1	2	3	4	5	6	7	8	9	10
Angle	40.1	42.5	41.5	40.8	42.4	41.3	41.5	42.9	40.5	41.5

Average limiting angle of friction (β) = 41.51^0

$\mu = \tan\beta$

$= \tan 41.52^0 = 0.88$

$\mu = 0.88$

Therefore, the coefficient of friction (μ) of manure on metal surface is 0.88.

c) **BULK DENSITY**

The bulk density of a material is defined as the total weight including the weight of water per unit volume (Sidney 1963). Expressed as follows.

$$\rho_H = \frac{W}{V} \quad = \text{---} \quad 3.1$$

Where ρ_H = bulk density

W_t = total weight of solid and water

V = volume of core sampler

A core sampler was sunk into the manure heap. The manure surrounding the core sampler was removed. The sampler was weighed. (W_2). The empty core sampler was weighed (W_1). The volume (V) of the core sampler was taken. Five readings of the samples were taken and recorded as shown on the Table 3.12 below.

Table 3.12 Reading Of Weights and Volume of manure sample.

Sample	1	2	3	4	5	Average
Weight (kg)	0.500	0.5030	0.494	0.4900	0.504	0.4982
Volume (m^3)	6.292×10^{-4}	6.292×10^{-4}	6.292×10^{-4}	6.292×10^{-4}	6.292×10^{-4}	6.292×10^{-4}

Bulk density (p_H) $= \frac{W_2 - W_1}{V}$ ----------- (3.2)

$$= \frac{0.4982}{6.292 \times 10^{-4}}$$

$$p_H = 791.799\ kg\,m^{-3}$$

specific volume V_H (m^3/kg) $= \frac{volume}{W} = \frac{6.292 \times 10^{-4}}{0.498}$ 3.3

$$= 0.00126m^3$$

.: $V_H = 0.0013m^3/kg$

d) **Moisture content**

Moisture content of a material is defined as the ratio of the weight of water to the weight of the dry solid in the same volume expressed in percentage basis (Sidney 1963).

Five hundred grams of manure was taken and weighed. It then oven dried and the new weighted recorded. This was done for four weeks and the results recorded in Table 3.13.

The moisture content of the manure use determined on weekly basis through out the processing period. And the average moisture content was calculated using the expression given by Sidney (1963)

$$\text{Moisture Content (MC \%)} = \frac{\text{Weight of water} \times 100\%}{\text{Weight of dry sample}} \quad \ldots .3.4$$

$$(M.C) = \frac{Ww \times 100\%}{Ws}$$

Table 3.13 Results Of Moisture Content Determination Of Ripe Manure

Weeks	1	2	3	4	Average
Weight of sample (wg) (kg)	0.500	0.495	0.500	0.505	0.500
Weight of oven dry sample (Ws) (kg)	0.350	0.345	0.349	0.350	0.349
Weight of water removed (Ww) {Kg}	0.150	0.150	0.151	0.155	0.152

$$\text{Moisture Content (MC \%)} = \frac{Ww \times 100}{Ws}$$

$$= \frac{0.152 \times 100}{0.349}$$

$$= 43.55$$

$$M.C = 44\%$$

The moisture content of the ripe manure was found to be about 44% four weeks after ripening. Which is the suitable moisture content for spreading using the manure spreader.

The properties of the manure determined above are very important for the design of the manure spreader as they determine the uniformity of the distribution.

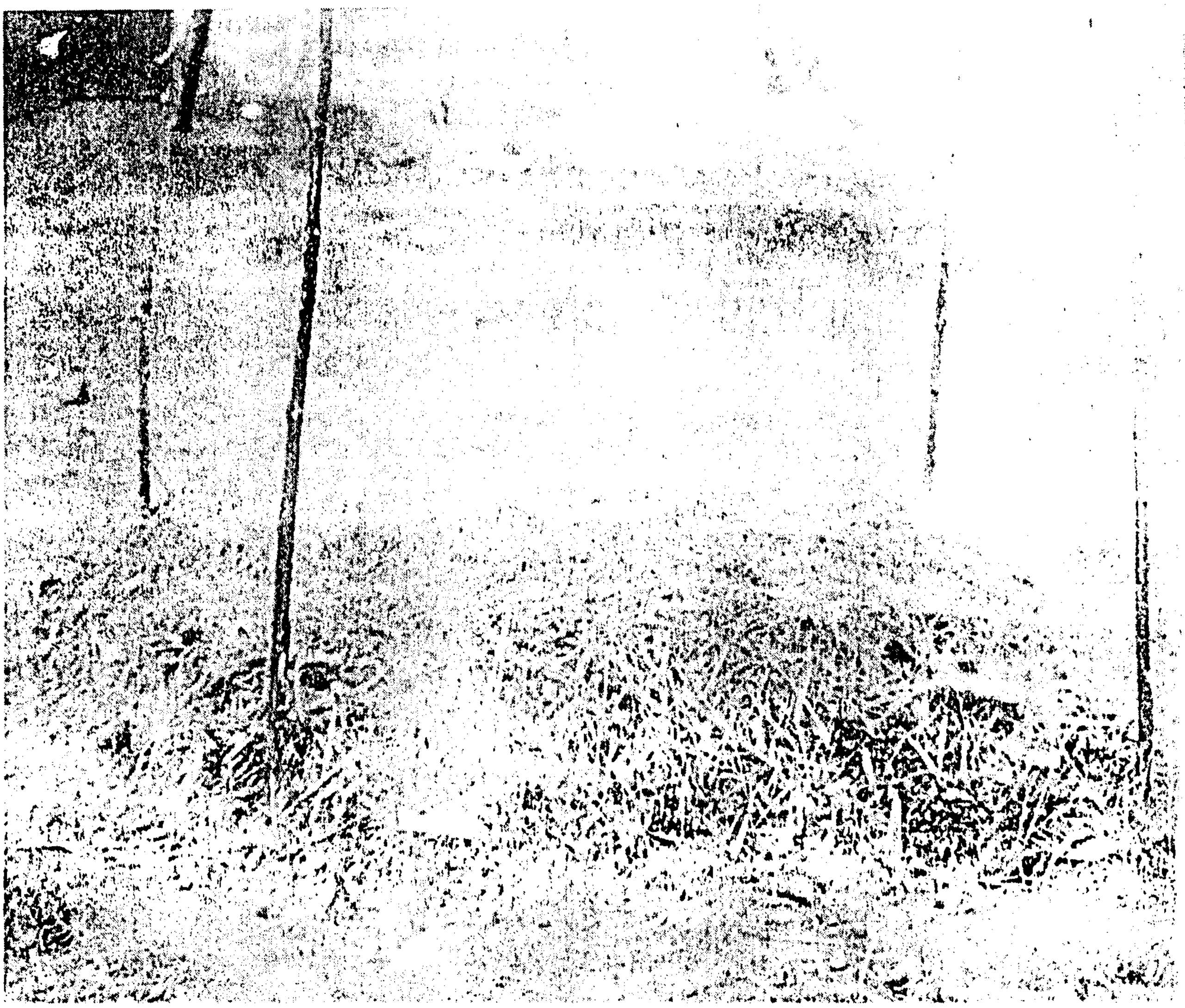

Plate VIII Experimental compost heap

3.6 DESIGN CONCEPT OF THE MANURE SPREADER

From the previous works on manure spreader, it has been discovered that the main principle of operation employed is the moving apron and spiral auger system in which the manure is moved backwards by a ratchet and pawl driving mechanism as described in section 2.5.3.2

The concept of the design carried out in this project work is slightly different in the sense that the spreading auger was mounted directly at base of the trapezoidal hopper. The manure moves by gravity unto the spreading mechanism which in turn spreads it uniformly. This concept has eliminated the incorporation of the ratchet and pawl drive as well as the moving base thereby simplifying the design.

3.6.1 DESIGN CONSIDERATION OF THE MANURE

The main factor that was considered in the adoption of the above concept is the properties of the manure. The study of the properties of manure has revealed that the final product of a properly decomposed manure in a brownish black finely divided powder. Under this condition, the manure can easily flow under gravity to the spreading mechanism which propels it out uniformly. Therefore, this machine will handle best a properly decomposed manure.

3.6.2 MATERIAL SELECTION

According to Smith and Wilkes (1980), the strength and durability in service of a farm implement or machine depends on largely upon the kind and quality of materials used in building it. Therefore, the success or failure of an implement or machine frequently depend upon the materials used.

The correct choice of materials for a machine determines its reliability which is the property of a machine to fulfil the given function, preserving its operation indices within given limits during the required time interval (Bosoi et al, 1988)

Several factors determine the material to be selected for any particular design some of which include, the load to be carried and the forces it will be subjected to, the environment it will work in, the type of material it will come in contact with and so on.

Lovegrove (1968), recommended that the chassis of a manure spreader be made in one unit forming a robust structure to carry the weight of the manure ranging between 1½ tons which is either all steel or steel frame work with wooden bottom or sides. The steel is usually treated against corrosion and the wood is prickled in creosate to check for corrosion

Following the above recommendations, and considering the bulkiness of manure and it corrosive properties, the materials selected for the construction of the proposed manure spreader was steel. The design calculation of all the components will be based on steel material.

3.7 DESIGN OF THE COMPONENTS OF THE MACHINE

3.7.1 THE HOPPER

The hopper is to be constructed using a 2mm thick metal sheet. It is to be made into a rectangular top and trapezoidal shapes with the following dimensions.

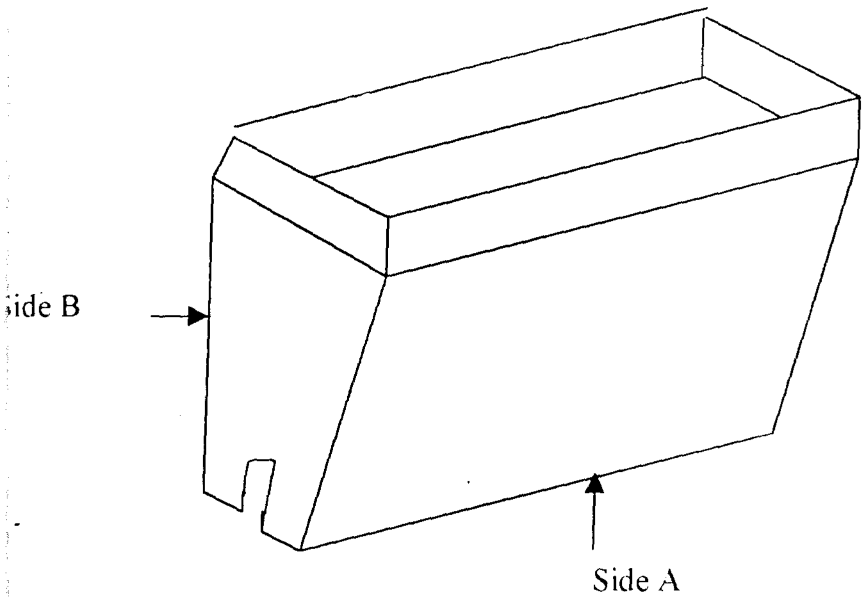

(a) Hopper

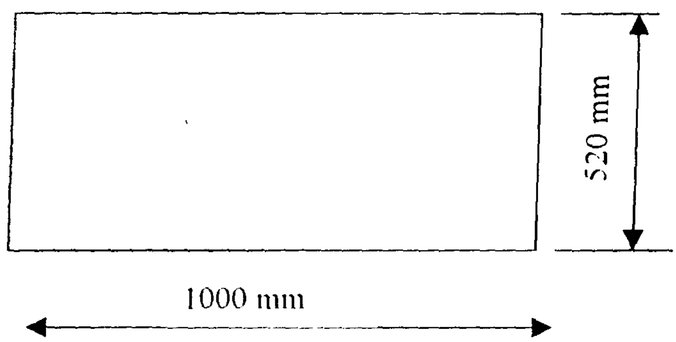

(b) Side A.

Fig 3.2 Manure hopper design

Thickness of metal sheet = 2mm

Density of mild steel = 7850kg/m^3

Area of side A, Ar = L x B -- 3.5

$= 1000 \times 520$

$= 520{,}000\ mm^2$

$Ar = 0.520m^2$

Volume of material of side A, (V_A) = Area x thickness ---------------- 3.6

$= 0.520 \times 0.002$

$V_A = 0.00104\ m^3$

Mass of material of side A, M_A = volume x density.

$= 0.00104 \times 7850$

$= 8.1644kg$

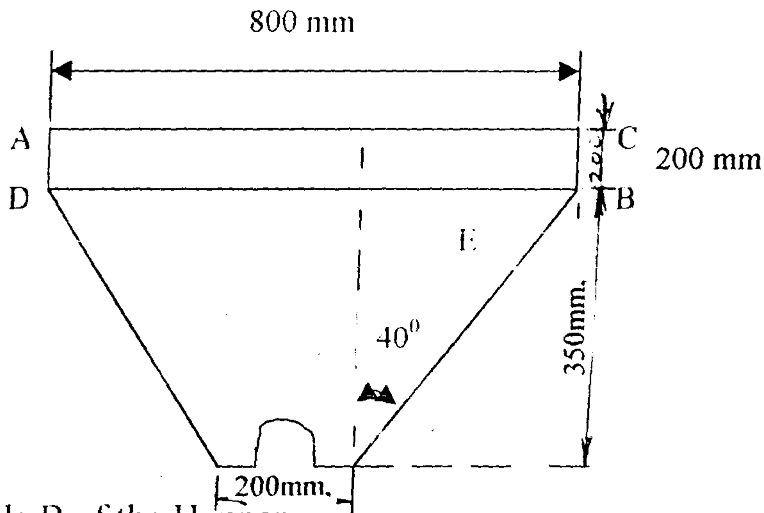

Fig 3.3 side B of the Hopper.

Area of rectangular section ABCD, $A_B = L \times B$

$= 800 \times 200$ mm

$= 160{,}000$ mm

$A_B = 0.160\ m^2$

Volume of rectangular section ABCD, V_{BI} = Area x thickness

$= 0.160 \times 0.002$

$V_{BI} = 0.00032\ m^3$

Mass of material of Rectangle ABCD, M_{BI} = volume x density ------ 3.7

$= 0.00032 \times 7850$

$M_{BI} = 2.512$ kg

Now, considering trapezoid ADEF of side B

Area of trapezoid ADEF, $A_{BII} = \frac{1}{2}(a + b) \times h$ ----------------------- 3.8

$= \frac{1}{2}(800 + 200) \times 350$

$= 175000$ mm

$A_{BII} = 0.175\ m^2$

Volume of ADEF, V_{BII} = Area x thickness

$= 0.175 \times 0.002$

$V_{BII} = 0.00035\ m^3$

Mass of material of trapezoid ADEF (M_B) = density x volume

7 850 x 0.0035

.: M_B = 2.748kg.

Total mass of side B = Area of rectangle ABCD + Area of trapezoid ADEF.

.: Mt_B = 2.512 + 2.748 kg

Mt_B = 5.26kg

Total mass of hopper material

Mass of side A, M_A x 2 = 8.164 x 2 = 16.328 kg

Mass of side B, M_B x 2 = 5.26 x 2 = 10.52

.: Total mass of hopper material (Mt) = 16.328 + 10.52

Mt = 26.848 kg.

Mass of manure in the hopper.

Volume of rectangular portion of hopper Vr = L x b x h

.: Vr = 1000 x 800 x 200

= $1.6 \times 10^8 mm^3$

Vr = $0.16 m^3$

Volume of trapezoidal portion of the hopper (Vt)

$Vt = \frac{1}{2}(a + b) \times h$

$= \frac{1}{2}(500 + 200) \times 350$

$= 1.75m^3$

Total volume of hopper (V_T) = 0.16 + 0.175

$V_T = 0.335m^3$

Bulk density of manure = $800kg/m^3$ (Bosoi et al 1988)

∴ Mass of manure (Mm) = Density x volume of the hopper

= 800 x 0.335

Mm = 268 kg

Weight of hopper and material M_{TM} ($Mt + M_M$) = (26.848 + 268) x 9.81

M_{TM} = 2892.46N

Side B of the hopper is slanted at 40^0 being the angle of repose of manure which varies between 50^0 and 38^0 (Bosoi et al 1988).

3.7.2 ANALYSIS OF BUCKLING FOR HOPPER BARS.

The manure hopper is supported by four 350 x 45 x 5 mm mild steel bars. These members may fail due to the weight of the hopper and the manure in it.

To ensure safety, the critical load using Euler formula is determined and then compared with the actual load acting on them.

Eulers formula for calculating buckling is given as

$P_{cr} = 4\pi^2 EI$ -------------- 3.9 (Spot 1988)

Where P_{cr} = critical load (N)

E = Elastic modulus of the material (GN/m^2)

I = moment of inertia of the material (M^4)

L = Axial length of the member (M)

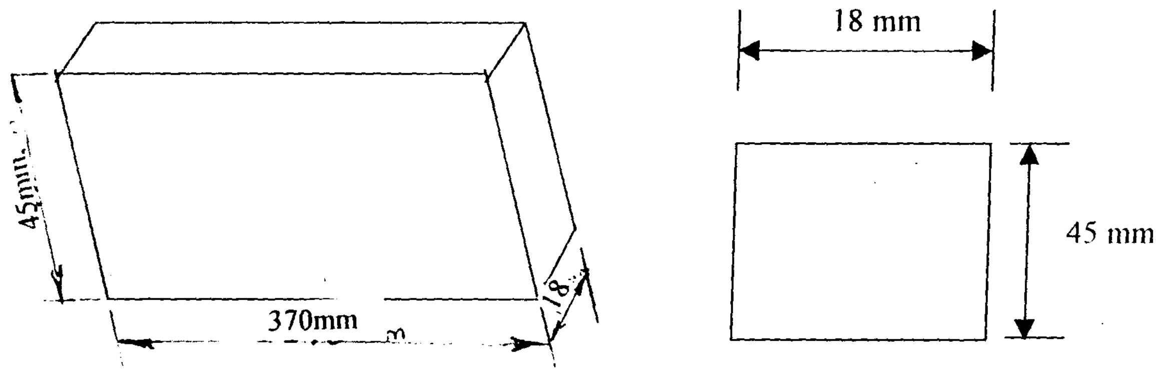

Fig 3.4 Hopper support bar

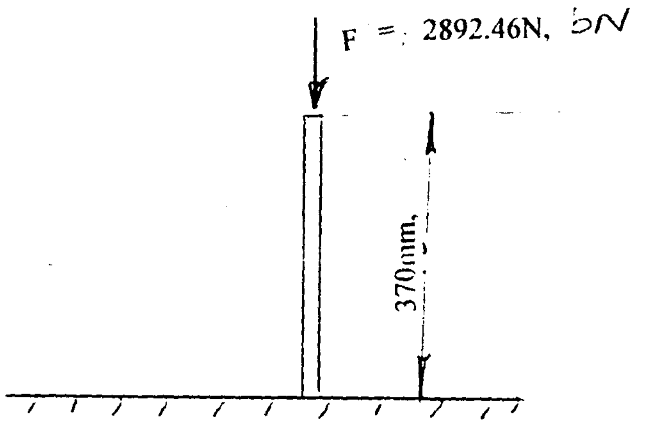

Fig. 3.5 Free body diagram of support bar

Using the formula $I = \frac{b^3h}{12}$ ----- (3.10) – (Appendix E)

$$= \frac{0.018^3 \times 0.045}{12} = 2.187 \times 10^{-8} m^4$$

L = 370 mm

$$\pi = 3.141592,\ P_{cr} = \frac{4 \times \pi^{2} \times 207 \times 10^{9} \times 2.187 \times 10^{-8}}{(0.1369)}$$

$$P_{cr} = 1305.496KN$$

Since the critical load of 1458.9KN is greater than the load of 2.89KN acting of the member the design is safe.

3.7.3 FRAME DESIGN

The spreader frame is the carrier of all the other components of the machine. Therefore rigidity and strength are the most important criteria to be considered in the design. This design involves the determination of all the forces acting on the frame and choosing the correct size of material that will not fail due to bending or deflection.

The frame is to be made of a square hollow steel section welded into a rectangular shape of 1080 mm x 800 mm x 5 mm.

The correct size is determined as follows.

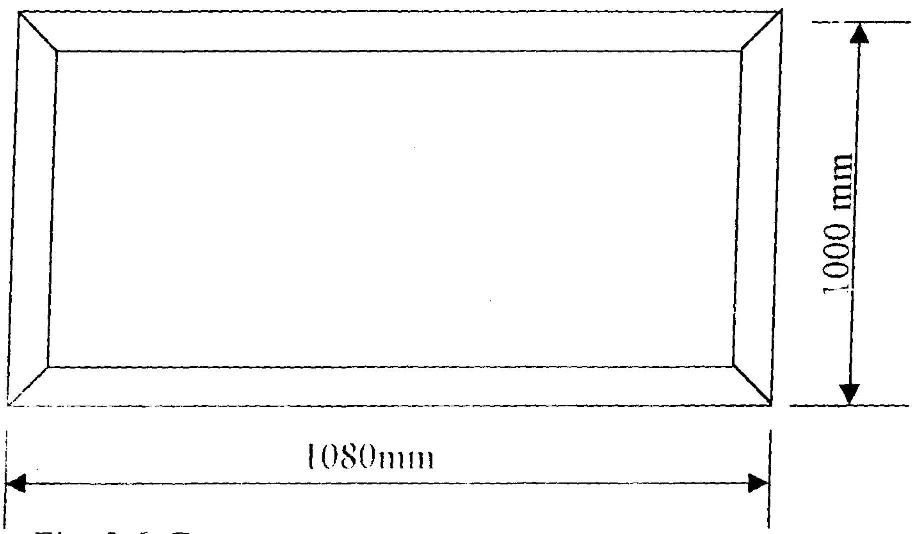

Fig. 3.6 Frame structure

The allowable deflection for a fixed frame with no supports is given as

$$Z_{allow.} = \frac{span}{360} \quad \text{------} \quad (3.10)$$

where.

span =length of the beam. (mm)

the maximum deflection which can occur on a long length of beam is given as:

$$Z_{max} = \frac{5WL^3}{384EI} \quad \text{------} \quad (3.11)$$ (Gupta and Malhota 1973)

where

W = uniformly distributed load (N)

L = span of frame (M)

E = Elastic modulus of material (Nm^2)

I = moment of inertia.

For the safety of the design $Z\ allow \geq Z\ max$

Therefore $Z_{allow} =$

$$\frac{5WL^3}{384EI}$$

The moment of inertia of the frame was then obtained as follows.

$$I = \frac{5WL^3}{384E\ Z_{allow.}}$$

W = 3324.099N

L = 1080mm

$E = 207 \times 10^9 Nm$

$Z_{allow} = 1.080$

$$\therefore I = \frac{5 \times 3324.099 \times 1.080^3}{384 \times 209 \times 10^9 \times \frac{1.050}{360}}$$

$$= \frac{20937.037}{2.3484 \times 10^{11}}$$

$8.779 \times 10^{-8} m^4$

$87790 mm^4$

for a hollow section, moment of inertia $I = \frac{H^4 - h^4}{12}$ --------- 3.12 Appendix F)

$$h = H - 2t$$

where t = thickness = 5mm

$\therefore \quad h = H - 2t$

where r = thickness = 5mm

$\therefore \quad h = H - 2(5)$

$h = H - 10$

Substitute $h = H - 10$ into $I = \frac{H^4 - h^4}{12}$

$$I = \frac{H^4 - (H - 10)^4}{12}$$

Expanding the expression

$$I = \frac{40H^4 - 600H^2 + 4000H - 10000mm^4}{12}$$

Equating both value of I, we have

$$87790 = \frac{40H^4 - 600H^2 + 4000H - 10000mm^4}{12}$$

$1053480 = 40H^3 - 600H^2 + 4000H - 10000$

$40H^3 - 600H^2 + 4000H - 10000 - 1053480 = 0.$

$40H^3 - 600H^2 + 4000H - 1063480 = 0$

$H3 - 15H2 + 100H - 26587 = 0$

Solving for H

$H = 34.4723256187$

$H = 34.47mm$

From appendix G, a square hollow steel section of 40 x 40mm was selected for the frame of the machine.

3.7.4 DRIVING UNIT (POWER TRANSMISSION)

The manure spreading mechanism is driven by the power taken from the PTO shaft through a telescopic shaft into a gear box with bevel gears, which the drive is taken out through an output shaft at an angle of 90°. The output shaft has a pulley attached to the other end to which belts transmit the drive to the spreading rotor. The layout is as shown below.(Fig. 3.7)

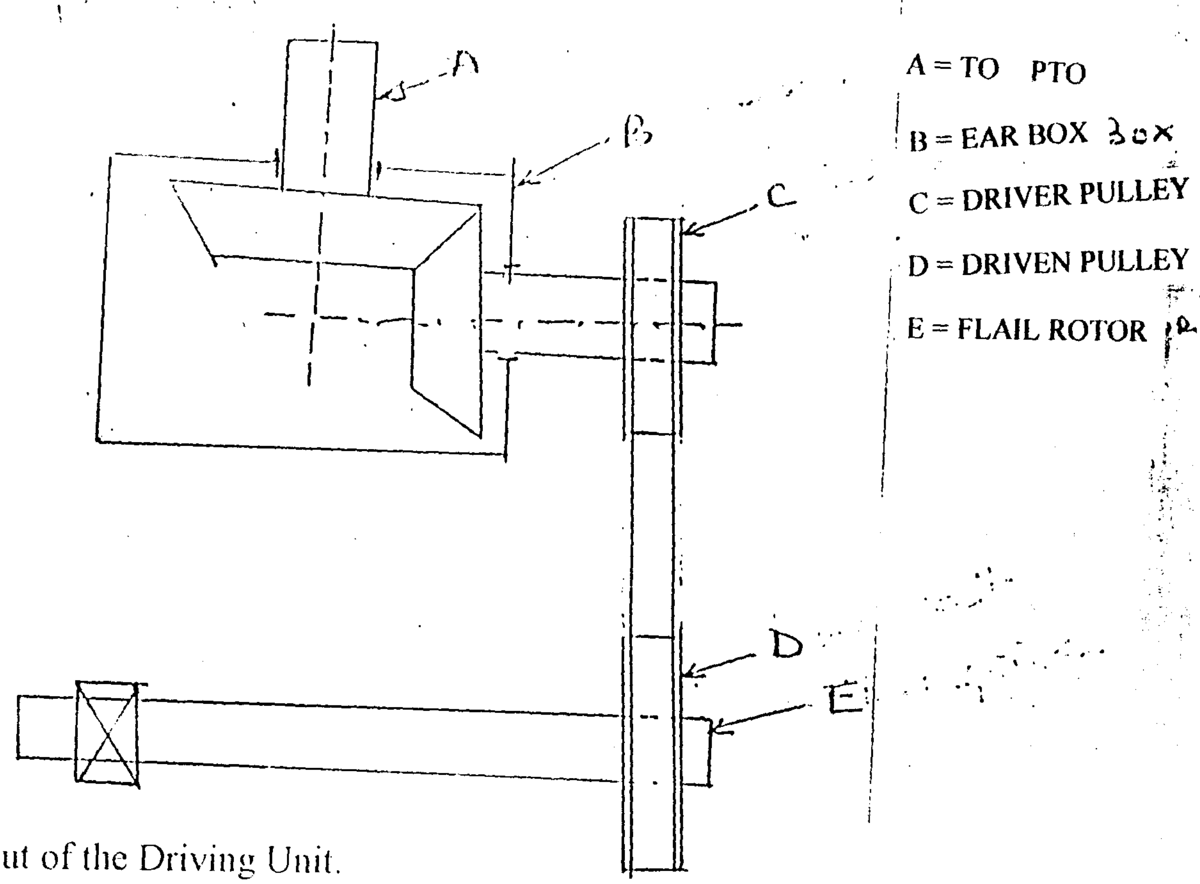

Fig. 3.7 Layout of the Driving Unit.

3.7.5 SOURCE OF POWER

The manure spreader is designed to be operated by the tractor. The most common tractors in Nigeria are the class two tractor with horse power ranging between 60 and 90 and PTO speed of 540rpm. A tractor of 29.1 kW was used for the design of the manure spreader.

Tractor available speed (W_1) = 540rpm

Required speed at rotor W_3 = 900rpm

The speed at the PTO has to be multiplied to the required speed Based on the availability of gears in the market. Two gears wheels with the gear wheel = 37teeth the pinion wheel = 15 teeth were selected.

The expression for gear ratio (GR) = $\frac{\text{No of teeth on gear}}{\text{No of teeth on pinion}}$ -- 3.13

$$GR = \frac{37}{15} = 2.47$$

∴ Speed at the gear output shaft W_2 = W_1 x GR

= 540 x 2.47

= 1332rpm

Since the speed at second pulley (W_3) = 915rpm and that of the output shaft w2 = 1332rpm the speed ratio (Vr) between the two pulleys

$$= \frac{W_2}{W_3} \text{ ---------------- } 3.14$$

$$= \frac{1332}{915}$$

$$Vr = 1.46$$

The Driver pulle y pitch diameter $PD_R = 110mm$

The Driven pulley diameter PD_N is calculated from the formula

$$PD_N = PD_R(1 - S)Vr \quad \text{---} \quad 3.15$$

Where :

S	=	Slip factor given as 0.01
Vr	=	Speed ratio of pulley = 1.46
PD_R	=	Pitch diameter of driver pulley = 110mm

$$\therefore PD_N = PD_R(1-S)Vr$$

$$= 110\,(1-0.01)1.46$$

$$= 110\,(0.99)1.46$$

$$= 158.994mm$$

A 160mm pitch diameter pulley was selected.

Agitator pulley

Driver speed (W_3)	=	915rpm
Pitch diameter of driver pulley	=	160mm
Pitch diameter of driven pulley	=	x
Speed of agitator pulley (W4)	=	560 rpm

$$PD_4 \text{ Pulley} = \frac{W_3}{W_4} = \frac{PD_A}{PD_N}$$

$$\frac{915}{560} = \frac{PD_A}{160}$$

PDA = 255.79mm

Pulley diameter of 260mm was selected.

3.76 BELT SELECTION

Many methods are employed in transiting power from one point to the other in Agricultural machinery. Among these methods are the belts which can be flat *or* V-shaped.

According to Kepner et al 1987, V-belts are used extensively in Agricultural machinery. Because of it obvious advantages, the V-belt was selected for power transmission in the machine under design. The following method was used for the selection.

1. **Determination of the designed horse power HP (kw):** The rated power of the tractors = 29.1kw. Service factor from table = 1.4

$\therefore$ designed power (Pd) = 29.1 x 1.6

Pd = 46.56KW

Determination of the belt speed.

The belt speed is calculated by

$$S = \pi RD \text{ ------------------------------------ } (3.16)$$

Where S= belt speed

π =3.14

R= Sheave speed (Rpm) = 1332rpm

D= Sheave pitch diameter 110mm

$$\therefore S = \frac{3.142 \times 1332 \times 110}{60}$$

$$S = 7.67 m/s$$

Determination of arc of contact this given be

$$\beta = 180 - \frac{[60(dl - ds)}{L} \text{ -------------------------------------- } (3.17)$$

Where

DL = Large pitch diameter = 160mm

Ds = Small pitch diameter = 145mm

L = Distance between sheave shaft centuries = 400mm

$$\therefore \beta = 180 - [60\frac{(160 - 110)}{400}]$$

$$= 180 - [60(0.0375)]$$

$$= 180 - 9.9$$

$$\beta = 172.51mm$$

Determination of the required belt length.

The required belt length can be calculated from the formula.

$$L = 2c + \pi \frac{(PD_l + PD_s)}{2} + \frac{PD_l - PD_s}{4c} \text{ .... } 3.18$$

Where; L = Belt length

C = Centre distance between pulleys

PD1 = Pitch diameter of large pulley

PDs = Pitch diameter of small pulley

C = 400mm

PD1 = 160mm

PDs = 110mm

$$\therefore L = 2 \times 400 + \pi \frac{(160 + 110)}{2} + \frac{160 + 110}{4 \times 400}$$

$$= 800 + 425.115 + 0.1687$$

$$L = 1224.283mm$$

From Appendix H, the effective length of the nearest standard belt length is, (1224 mm), the HB cross section belt was selected.

From Appendix H the width of the selected cross section belt is 16.7mm and depth is 10.3mm. Two belts with the above specifications were selected one to drive the flail spreading mechanism and the other to derive the agitator.

3.7.7 PULLEY SELECTION

Three pulleys were selected for the machine.

1. One driver pulley of 110mm pitch diameter
2. One driven pulley attached to the spreading mechanism rotor of 160mm pitch diameter.
3. One driven pulley of 260mm pitch diameter attached to the manure agitator in the hopper.

3.7.8 BEVEL GEAR SELECTION

Toothed level gears are used to transmit rotation between shafts located at a certain angle to each other. It is mostly used for drives with axis interesting at an angle of 90o. The straight level gear system the most common for use in Agriculture machine. (Plate IX).

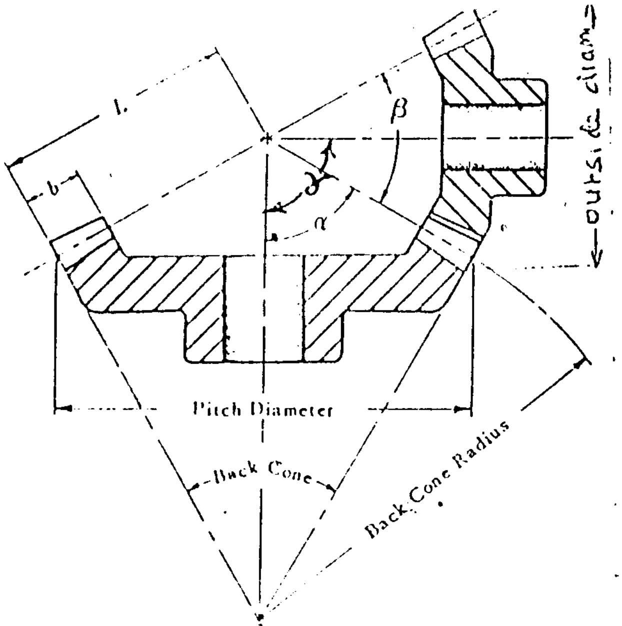

L = Cone distance

β = Face width

α = Pitch angle

β = Cone angle

λ = Shaft angle

Plate IX Bevel gear Nomenclature

Source:Hall et al 1980

Data

The speed from the tractor P. T. O. Shaft is 540 rpm. The speed required at the spreading mechanism is about 100.00 therefore the P. T. O. speed has to be stepped up. The following gear wheels were selected.

The driven gear wheel has 37 teeth.

The driven pinion gear has 15 teeth

Table 3.14 Determination of the dimensions of bevel gears.

Description	Pinion	Gear
No of teeth	$Z_p = 15$, Module(m) = 4	$Z_g = 37$, Module(m) = 4
Pitch circle diameter	$D_p = Z_{pm}$, 15 * 4= 60mm	$D_g = Z_{gm}$, 37*4 = 148mm
Transmission ratio(i)	$I = \frac{Z_g}{Z_p} = \frac{37}{15} = 2.47$	$I = \frac{Z_a}{Z_p} = \frac{37}{15} = 2.47$
Pitch cone angle (shaft angle = 90^0)	$\tan \delta_p = \frac{d_p}{Dg} = \frac{1}{L} = \frac{1}{2.47} = 0.405$ $\delta_p = \tan^{-1} 0.405 = 22.04^0$	$\tan \delta g = \frac{Za}{Z_p} = 2.47$, $\delta g = \tan^{-1} 2.47$ $= 67.95$
shaft angle	$\varepsilon = \delta_p + \delta g = 22.04 + 67.95 = 90^0$	
Tip circle diameter	$d_{ap} = d_p + 2m\cos \delta_p$ $= 60+2*4*\cos 22.64=67.42$mm	$d_{ag} = d_g + m\cos \delta_g$ $= 148*2*m\cos 67.95=151.00$mm

Cone distance (R)	$R = \frac{d_p}{282\sin\delta_p} = \frac{60}{2\sin 22.04} = 80.07mm$	$R = \frac{d_g}{2\sin\delta_p} = \frac{60}{2\sin 67.95} = 80.00mm.$
Face width(b)	$b \subseteq R/3 = 60/3 = 20mm$	$b \subseteq R/3 = 80'3 = 26.66mm.$
Virtual no of teeth	$Z_{vp} = \frac{Z_p}{Cos\delta_p} = \frac{25}{\cos 22.04} = 16.18$	$Z_{vg} = \frac{Z_g}{\cos\delta_g} = \frac{37}{\cos 67.95} = 98.55$
Top clearance ©	$C = 0.2m = 0.2 * 4 = 0.8$	
Whole deptl(h)	$H = 2m + 0.2m,\ 2 * 4 + 0.2 * 4$ $= 8.8mm$	
Adendum (ha)	$h_{ap} = h_{ag} = m = 4mm$	
Dedendum (hf)	$h_{fp}\ h_{fg} = 1.2m,\ 1.2 * 4 = 4.8mm$	
Adendum angle	$\tan\varphi_{ap} = \tan\varphi_{ag} = m/12 = 4/80 = 0.05$	$\varphi = \tan^{-1} 0.05 = 2.862$
Dedendum angle	$\tan\varphi_{fp} = \tan\varphi_{fg} = 1.2m/12$ $\frac{1.2*4}{80} = 0.06$ $= \varphi = \tan^{-1} 0.06 = 3.43^0$	$\delta_{ag} = \delta_g + \delta_{ag}$ $67.95 + 3.43 = 17.38^0$
Back cone or Face angle	$\delta_{ap} = \delta_p + \varphi_{ap}$ $= 22.04 + 2.862 = 24.902^0$	
Crown height(ch)	$CH_p = dp/2 - m\sin\delta_p$ $60/2 - 4\sin 22.04 = 28.49mm$	$CHg = d/2 - m\sin\delta_g$ $148/2 - 4\sin 67.95 = 19.96mm$
Backcone distance(Ra)	$R_{ap} = R\tan\delta_p$ $80 * \tan 22.04 = 32.38mm$	$R_{ag} = R\tan\delta_g$ $80 * \tan 67.95 = 195.5mm$

3.7.9 DESIGN OF THE GEAR BOX OUTPUT SHAFT

Determination of the shaft diameter. The gear box output shaft consist of pinion gear at one end and a pulley at the other end supported by two bearings.

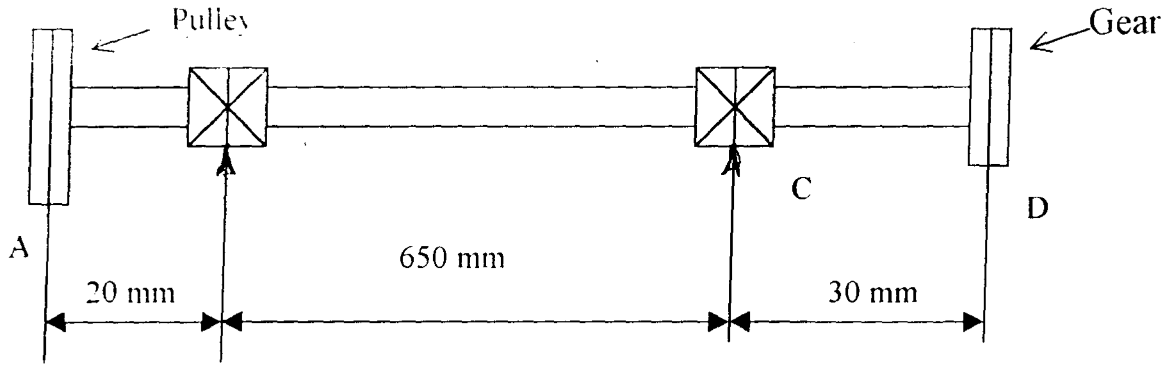

Fig. 3.6 Gear box output shaft free body diagram.

Data

Power = 29.1 K.W

Speed = 540 rpm

Weight of pulley = 4.905 N

Weight of gear wheel = 4.905 N

The forces acting on the shaft are:-

a. Weight of gear wheel

b. Weight of pulley wheel

c. Tension of the belt

The combine effect of these forces will cause

1. Bending moment Mb

2. Torsional moment Mt

From equation (13)

$Mt = 514.64$ Nm

Determination of tight side (T_1) and slack side T_2 tension

Belt tension (pull) $T_1 - T_2 = \frac{1000 \times K.W}{V}$ ------------------------- 3.19

Where T_1 = Tight side tension (N)

T_2 = Slack side tension (N)

Kw = Power transmitted (K.W)

V = Belt speed (m/s)

$T_1 - T_2$ = effective pull (N).

Torque = pull x radius

$Mt = (T_1 - T_2)R$ -- 3.20

Where Mt = torsional moment = 514.6400Nm.

R = radius of pulley = 0.0225

$(T_1 - T_2) \times R = Mt$

$(T_1 - T_2) \times 0.0725 = 514.64$

but $\frac{T_1}{T_2} = 5$ (Kepner et al 1982) --------------------------- 3.21

$\therefore T_1 = 5\ T_2$ --- 3.22

Subst. eqn. 3.33 into eqn 3.23

$(5T_2 - T_2)\ 0.0725 = 514.64$

$4T_2 \times 0.0725 = 514.64$

$0.29T_2 = 514.64$

$T_2 = 1774.621$ N

$T_1 = 5 \times 1774.621$ N

$T_1 = 8873.103$ N

$\therefore$ Total pull $(T_1 + T_2) = 1774.621 + 8873.103$

$= 10047.724$ N

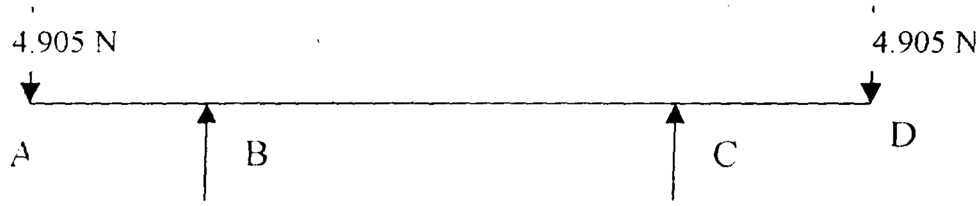

Fig. 3.8 free body diagram of gear output shaft.

Determine reactions at R_B and R_C

Considering vertical forces.

$\Sigma M_{RB} = 0$

$= 4.905 \times 0.02 + R_B \times 0 - R_C \times 0.650 + 4.905 \times 0.700 = 0$

$0.650 R_C = 3.335$

$\therefore R_C = 5.131$ N

Summation of vertical forces

$\Sigma fy = 0.$

$R_B + R_C - 4.905 - 4.905 = 0$ ------------------------------- 3.23

$R_B = 9.81 - 5.131$

$R_B = 4.677$ N.

Calculation of the shearing force

At point D, $S_{DC} = -4.905$ N

$S_{CB} = -4.905 + 5.131$

$= 0.226$ N.

$S_{BA} = -4.905 + 5.131 + 4.677$

$= 4.903$N

Calculation of the bending moment

At point A, BM = 0

At point B, BM = - 4.905 x 0.02 = -0.0981Nm

At point C, BM = - 4.905 x 0.67 + 4.677 x 0.650

= 0.246 NM

At point D, BM = -4.905 x 0.700 + 4.677 x 0.680 + 5.13 x 0.03

= -3.434 + 3.434 = 0

Considering horizontal loading caused by belt tension.

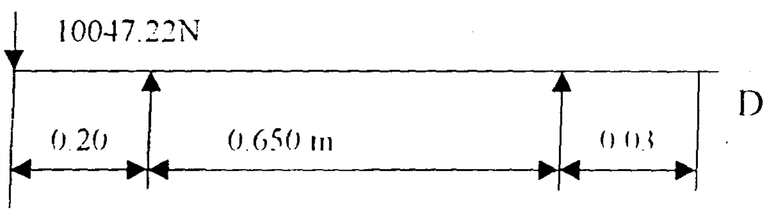

Fig. 3.8C Free body diagram

Taking moment about R_C

$EM_{RC} = 0$

$R_C \times 0 + R_B \times 0.650 - 100\,47.22 \times 0.670 = 0$

$0 \qquad 0.650R_B - 6731.64 = 0$

$R_B = 10356.365$ N

Summation of vertical forces.

$\Sigma f_Y = 0$

$R_B + R_C - 10047.22 = 0$

$R_C = 10047.220 - 10356.365$

-309.149 N

Calculation of the shearing force.

Shearing force at

$S_{DC} = 0$

$S_{CB} = -309.149$ N

$S_{BA} = -309.149 + 10047.210$

$= -309.149 + 10047.210$

$= 9738.06$ N

Calculation of bending moment

At point A, BM = 0

At point B, BM = -10047.210 x 0.02

= -200.944 NM

At point C, BM, - 10047.210 x 0.67 + 10356.356 x 0.65 = 0

- 6731.630 + 6731.631

= 0.0065

At point D, -BM, 10047.21 x 0. 70 + 10356.356 x 0.68 + (-309.145 x 0.03

- 7033.047 + 7042.322 0.00.

Resultant Bending Moment

At point B, Bm $= \sqrt{-00981^2 + (-200\text{-}944^2)^1}$

$= 200.944$

$Mb_{max} = 200.944$

Determination of shaft diameter

Using the formular $d^3 = \frac{16}{\pi Ss}\sqrt{(KtMt + (KtMb)}$

$$= \frac{16}{\pi \times 40 \times 10^6}\sqrt{(1.0 \times 514.64)^2 + (1.0 \times 200.944)^2}$$

$d = \sqrt[3]{0.0000703}$

$= 0.00413$m

$= 41.30$mm

A 45mm diameter shaft was selected for the component.

3.7.10 SPREADING MECHANISM SHAFT DESIGN

The shaft has flails attached through out its length. It will therefore be subjected to bending and torsional forces. It is supported on two bearings with a pulley attached to one of the ends.

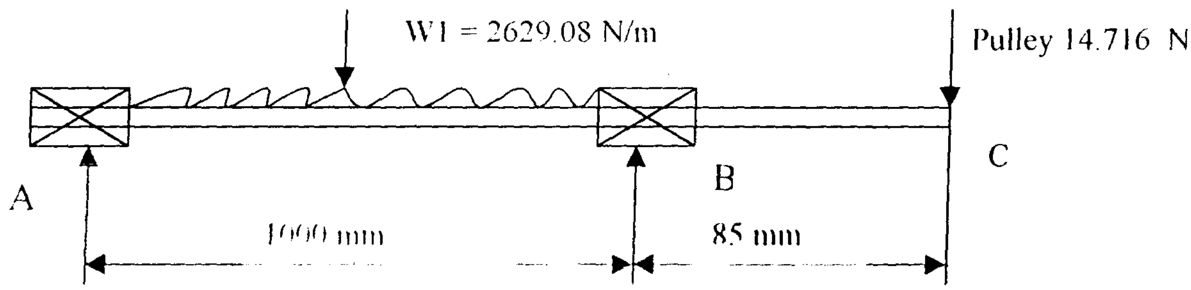

Fig. 3.11 spreading mechanism shaft design

Determination of reactions at A and B.

Taking moments about A

$\Sigma MI_{RA} = 0$, $R_A \times 0 + 2629.08\ N \times 1 \times ½ - R_B \times 1 + 14.716 \times 1.085 = 0$

$+ 1314.54 - R_B + 15.967$

$RB = 1329.254$ N

Summation of vertical forces.

$\Sigma fy = 0, R_A + R_B - W_1 - W_2 = 0$ ------------------------------ 3.24

$R_A = -1329.254 + 2629.08 + 14.716$

$R_A = 1314.542$ N

Calculating the Bending moment

At C, BM = 0

At B, BM = -14.716 x 0.085

= -1.251 NM

At any section x distance x distance from point B.

$M_x = 0 - 14.716\,[x + 0.085] + R_B x - Wx\,(x/2) = 0$ ----------- 3.25

At point B, when x = 0, $BM_B = -14.716\,(0.085)$

- 1.251 NM

At point A, when x = 1,

$BM_A = -14.716\,(1.085) + 1329.254\,(1) - 2629.08 \times (1 \times ½) = 0$

$BM_A = 0$

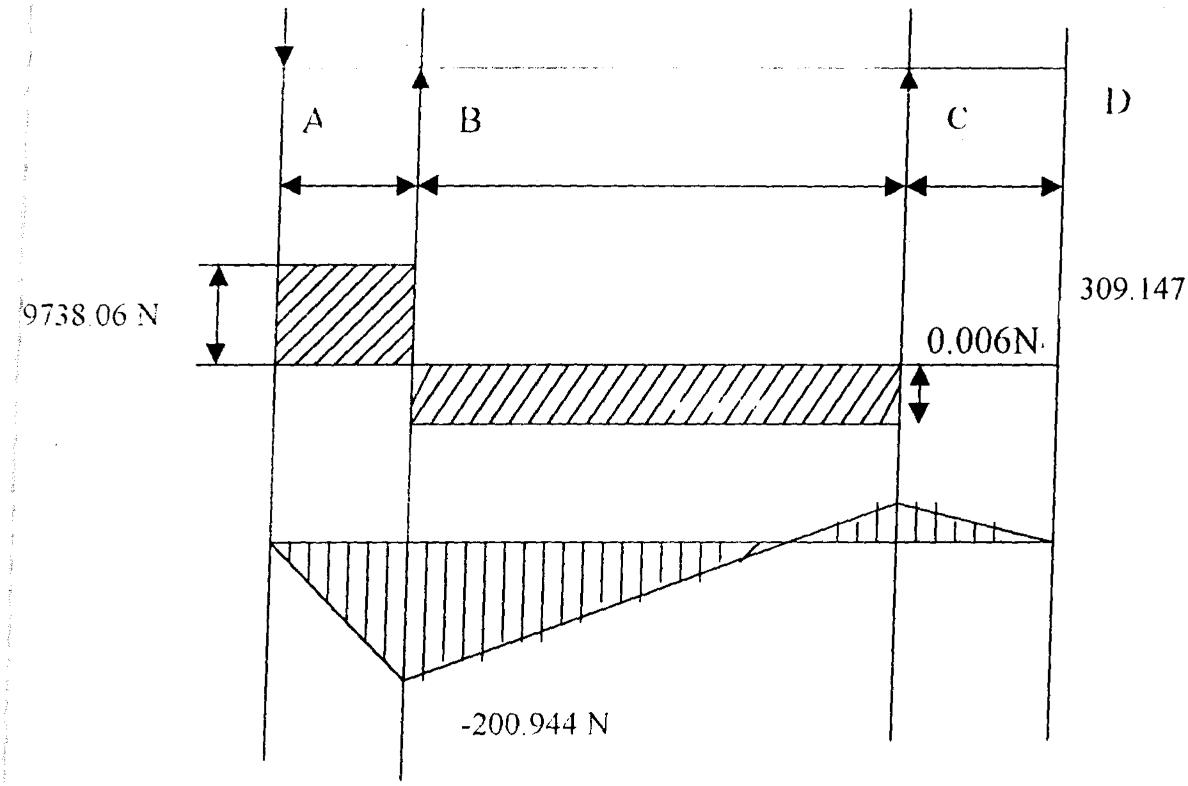

Fig 3.12 Shearing force and Bending moment diagrams

At point B, $BM = \sqrt{0.81^2 + (-200.944)^2}$

BM = 200.944 NM

At point C, $BM = \sqrt{0.246^2 + 0^2}$

$= 0.246$ NM

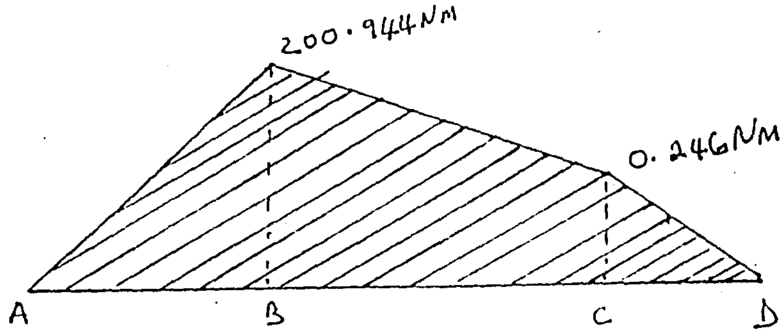

Fig 3.13 Bending moment diagram

Maximum bending moment Mb (max) = 200.944

Now the shaft diameter (d) can be calculated

Using the formula $d^3 = \frac{16}{\pi Ss}\sqrt{Kt\,Mt + (kb\,Mb)^2}$ ---------------------3.26

where Ss = shear stress 40×10^6 MN/m^2

kt = combined shock and fatigue applied to torsional moment

Mb = max. bending moment 200.944 NM

Mt = torsional moment 514.64 NM

Kb = combined shock fatigue applied

to bending moment = 1.0

$\therefore d^3 = \frac{16}{\pi \times 40 \times 10^6}\sqrt{(1.0 \times 514.64)^2 + (1.0 \times 200.944)^2}$

$d^3 = 1.27 \times 10^{-7} \times 552.474$

$= 7.016 \times 10^{-6}$

$$d = \sqrt[3]{7.016 \times 10^{-5}}$$

$$= 0.0412 \text{ ml}$$

$$d = 41.245 \text{ mm}$$

A standard shaft of 45mm diameter was used

3.7.11 DESIGN OF THE SPREADING FLAILS

According to lovegrove (1968), manure is usually spread uniformly by the use of a spiral spreader. It consists of left and right hand flights attached to a shaft or drum. This rotates at a high speed and scatters the manure evenly over a wide strip of land. The many variations of these augers include the continuous, discontinue band like or in the form of separate blades, all used for movement of different materials.

Another variation of the spiral spreader used for manure is the fail spreader. According to shippen et al (1980), there is a now a trend towards the use of flails to spread the manure instead of the much used shredding cylinder and auger (spiral spreader). This has the advantage of the ability to handle a wide range of materials right through from wet slurry to dry farm yard manure. As a result of the above advantages, the flail type spreading mechanism was adopted for the machine under design.

THE DESIGN

The flail type spreading mechanism adopted for this design consists of a rotor or shaft carried on two bearings and attached to it in three rows along the whole length are flail which are free to swing by the centrifugal force as the rotor rotates. The rotor or shaft was designed taking into consideration the weight of the manure on the shaft and length was determined by the width of the spreading machine. The flails are made of small pieces of metal bars welded to the rotor, a hook passing through a bar and 2 pieces of metal bars attached to the hook (Fig 3.14).

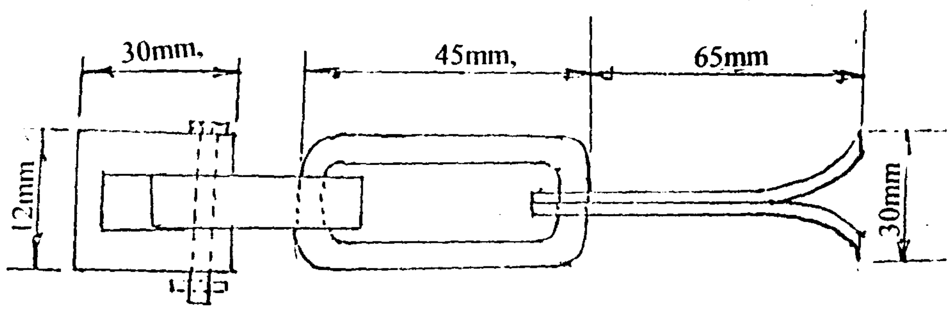

Fig. 3.14 Spreading flail design

3.7.12 MANURE AGITATOR DESIGN

Hoppers are used for the application of fertilizer, manure and seed planting. They are designed taking the angle of repose of the material into consideration so that they can easily flow. However, in order for the material to flow uniformly, agitators are normally incorporated into the hopper. The power for the operation of the agitator is taken from the spreading mechanism, same source as that which is operating the machine. The agitator can be in the form of spiral or screw conveyor or rotor with paddles or blades depending on the shape and size of the hopper as well as the type of material to be handled. The screw conveyor type agitator has been adapted for this machine. It is made up of a rotor with left hand and right hand flights welded along its periphery. As it is rotated, the spiral flight propel the manure out of the hopper uniformly. The standard method of designing screw conveyors was followed as presented by the American society of Agricultural Engineers7 (ASAE 1998; Handbook).

Below is the procedure for the design. (Fig. 3.15)

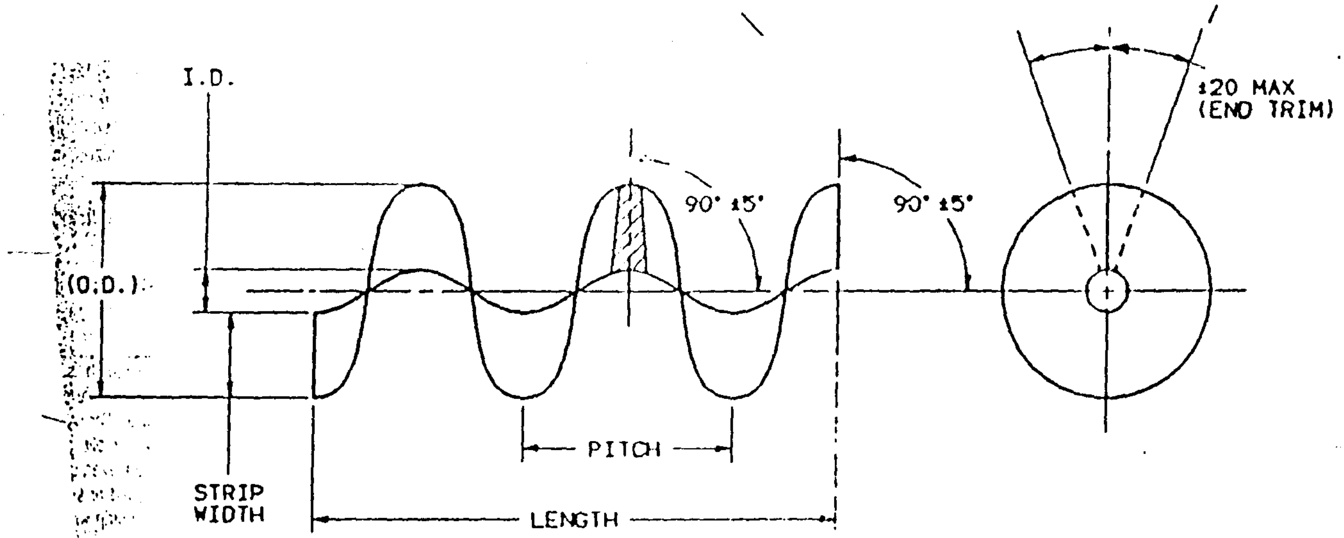

Fig. 3.15 Screw auger design.

ID = inside diameter

OD = outside diameter

t = pitch

L = length

W = strip width

Determination of parameters.

a. **Inside diameter:-** This is diameter of the shaft on which the flighting is welded. From section 3.8.5 the shaft channels was calculated to be 40mm which corresponds with that recommended by ASAE.

b. **Out side diameter:-** This is referred to as the screw diameter. It is represent by the diameter of the shaft and adding 2 times the strip width to the shaft diameter (ID). From the ranges of outside diameters given in Appendix .O. an outside diameter of 200mm has been selected for this design.

c. **Strip width:-** This is the length of the flights from the inner portion welded to the shaft to the outside tip of the flights.

Strip width = outside diameter – inside diameter/2

$$= \frac{OD - ID}{2} \qquad 3.27$$

$$W_s = \frac{200 - 40}{2} = 80 \text{ mm}$$

∴ Strip width (W) = 80 mm.

d. **Screw pitch (t):-** This the distance between midpoints of two consecutive flights or strips Spivakorsky (1983) recommended that the lead or pitch of a screw be taken as equal to screw diameter (t = D) for easily movable material and for poorly moving material t = 0.8D. Therefore since manure is not easily movable

The pitch of the manure spreader auger (t) = 0.8 x 40

t = 32 mm

e. **Screw length:-** This is the total length of the spreading auger and was calculated to be 1000mm.

f. **Strip thickness (T):-** This is the thickness of the material (metal) used for the construction of the flight or screw. It is recommended that it should be specified according to ANSI B32.3 size of whole 1mm increments, example 4 mm, 5 mm, 6 mm.

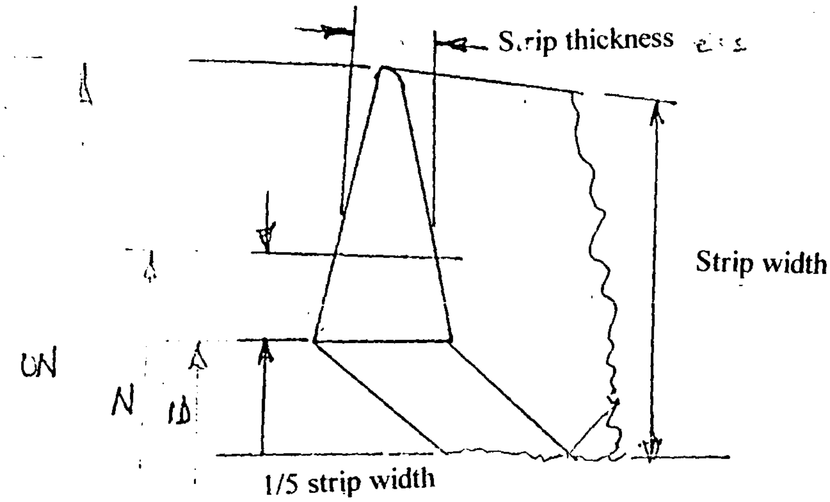

Fig. 3.16 Flighting dimension definitions

The --- strip thickness can be calculate thus

$$D = OD = 200 \text{ mm}$$

$$d = ID = 40 \text{ mm}$$

$$p = \text{pitch} = 32 \text{ mm}$$

$$w = \text{strip width} = \frac{D - d}{2} = \frac{200 - 40}{2} = 80 \text{ mm} \text{ ----- } 3.28$$

$$C = \text{O.D circumference } \pi D = 3.14 \times 200 = 628.319 \text{--- } 3.29$$

$$C = 628.319 \text{ mm}$$

$$N = \text{neutral axis diameter} = d + \frac{2w}{5} = 40 + \frac{2 \times 80}{5} = 72 \text{ -----}3.30$$

$$N = 72 \text{ mm}$$

$$A = \text{Neutral axis circumference} = \pi N = 3.14 \times 72 = 226.195 \text{ ----- } 3.31$$

$$A = 226.195 \text{ mm}$$

$$H = \text{length of helix at N in one pitch} = \sqrt{A^2 + P^2} \text{ -------------------- } 3.32$$

$$H = \sqrt{226.195^2 + 32^2}$$

$$H = 228.447 \text{ mm}$$

L = length of helix at OD in one pitch $=\sqrt{c^2 + p^2}$ -------------------- 3.33

$\sqrt{628.319^2 + 32^2}$

L = 629.133 mm

(T) = Strip thickness $= \frac{L}{H} = \frac{629.133}{228.447} = 2.753$ ----------- 3.34

$\therefore$ T = 3 mm.

A 3mm metal sheet was used for the construction of the spiral flights of the agitator.

3.7.13 TELESCOPIC SHAFT SELECTION

The telescopic shaft with its two universal joints is called power take off drive (Kepner et al 1982). It transmits power from the tractor P.T.O to the implement. This is a standard component of the machine which is selected based on the torque to be transmitted.

The torque to be transmitted by the telescopic shaft is the torque transmitted by the tractor P TO which is calculated as follows

Torque (PTO) $= \frac{K.W \times 9550}{RPM}$ -------------------------------------- 3.35

Where Kw = the power developed by the tractor

RPM = Speed of the P.T.O

Speed = 540 rpm

Power = 29.1 K.W

Torque $= \frac{29.1 \times 9550}{540} = 514.639$ NM.

The telescopic shaft will be subjected only to torsional stress. The diameter of the shaft is calculated using the formula.

$$Ss\,(all) = \frac{16\ Mt}{\pi d^3} \qquad \ldots\ldots\ldots\ldots\ldots\ldots\ldots\ldots\ldots\ldots\ 3.36$$

where Ss = allowable stress = 40 MN/m^2

Mt = moment torque = 514.639 NM

d = diameter (m or mm)

$$\therefore\ 40 \times 10^6 = \frac{16 \times 514.639}{\pi d^3}$$

$$d = \sqrt[3]{\frac{16 \times 514.639}{40 \times 10^6 \times \pi}}$$

= 0.0403 m

d 40 mm

So a telescopic shaft of 35 mm diameter was selected for the machine from the standard of the ASAE (Table 3.14)

3.7.14 BEARING SELECTION

According to Resheton (1978), Ball and Roller bearings comprise a group of machine components which have been most extensively standardized on an international scale and are manufactured in a central mass production plant.

Therefore, in the design of any machine, calculations are made to enable the designer select the bearings which are appropriate for his design.

Anti-friction bearings are often subjected to combine action of radial and axial loads which may be constant or accompanied by stocks and impacts, either the inner or outer ring may rotate, the temperature may be normal, below the normal or elevated. All these factors affect the performance of bearings and should be taken into account in the selection of bearing.

The normal procedure of selecting a bearing for a particular application are:

1. To determine the equivalent load P.
2. Determine the fatigue or rating life (L) of the bearing
3. Calculate the basic load rating or dynamic carrying capacity C, which is used in choosing the bearing with a C value that is the same or greater than the C value derived from bearing manufacturers handbook.

Resheton (1978) gave the following as the relationship of the three factors.

$$L = \left(\frac{C}{P}\right)^{P} \quad \text{------------------------------------} \quad 3.37$$

where L = fatigue or rating life in hours or revolutions

P = Equivalent load

C = basic load rating or dynamic load capacity

P = an exponent equivalent according to experimental data 3.0 for ball bearings and 3.33 for roller bearings.

The manure spreader has the spreading mechanism on two bearing with the following loads.

1. The weight of the manure

2. The weight of the shaft

3. The weight of the sheave on the shaft

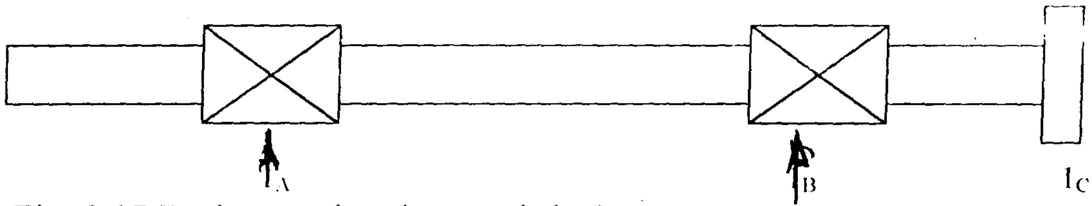

Fig. 3.17 Position of bearings and shaft

from design calculation section pulley

Weight on bearing A = 1314.542 N

Weight on bearing B = 1329.254 N

Thrust on bearing B due to belt tension = 44.35 N

The bearing properties were determined as follows:

1. Rating life:- Allen et al (1980) report that SKF bearing manufacturers recommended a life of 20,000 hrs to 30,000 hrs for machines in general in the mechanical industries where machines are fully utilized for eight hours services. It is assumed that the manure spreader falls within this category and have a rating life of 25000 hrs.

∴ Rating life [Lh] = 25000 hrs.

2. Equivalent load : P

Equivalent load P is calculated from the formula

$P = XVfr + \Psi fa$ -- (3.38)

Where X = Radial factor given as 3.3

Rating life in revolution L_n

$L_n = L_h \times 60\text{mins} \times RPM \times 1/10^6$

L_n = 810 rev.

∴ Dynamic load capacity $C = L^{1/P} P$ ---------------- 3.39

$C = 810^{1/3} \times 117.58$

$= 1096.045$ N

From Appendix 1 the least value of C = 360kg which is considered for the selection of the bearing to take care of overloads, ∴ bearing no. = 6000 inside diameter = 10mm, outside diameter 26mm

For bearing at point C

Data

Fr = 5.131 N	dynamic effects in gear drive
X = 3.3	a) vibration effect factor f_k 1.0 1.3
V = 1.0	2) dynamic effect in machine factor fd = 1.0 – 3.0
ψ = 2.31	∴ Gear force eff. = $F_i f_k f_d$
$F_a = 0$	$F_{eff} = 5.131 \times 1.3 \times 1.5$

$F_{eff} = 10.00545$ N

Equivalent load P = XV Feff + Ψfa (from 3.42

$3.3 \times 1.0 \times 10.0054 + 0$

P = 33.018 N

dynamic load capacity $C = L^{1/P} \times P$

$= 810^{1/3} \times 33.018$

$= 307.783$ N

31.374 kg.

The bearing size selected A is used for point B since they carry the same load.

BEARING SELECTION FOR THE MANURE AGITATOR

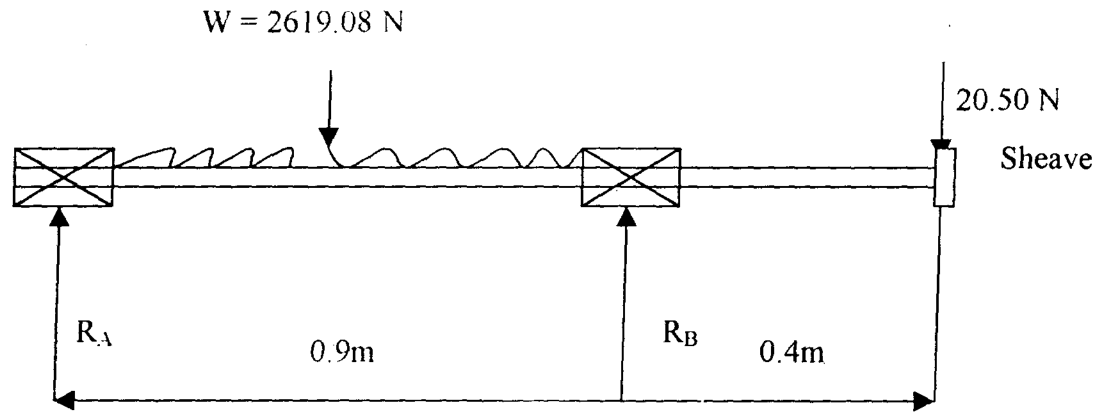

Fig. 3.18 Location of bearing on agitator shaft

Determination of Reactions at A and B.

Taking moments about A

$\sum m\, R_a = 0,\ R_A \times 0 + 2629.08 \times 0.9 \times \frac{1}{2} - R_B \times 1 + 20.50 \times 1.3$

$$0 + 1183.086 - R_B + 26.65$$

$$RB = 1183.086 + 26.65$$

$$= 1209.236\ N$$

Summation of vertical forces

$\sum Fy = 0 \qquad R_A + R_B - W_1 - W_2 = 0$

$$R_A + 1209.736 - 2629.08 - 20.50 = 0$$

$$R_A = -1209.736 + 2629.08 + 20.50 = 0$$

$$= 1209.736 + 2649.58$$

$$R_A = 1439.844$$

Load at bearing A = 1439.844 N

Load at bearing B = 1209.736 N

Selection of bearings

Equivalent load P is calculate from 3.43

$P = XVfr \times \psi fa.$

$= 3.3 \times 1.0 \times 1439.844 \times 0$

$= 4751.148$ N

Rating life in revolution, $L_n = \frac{2500 \times 60 \times 564.3}{10^6}$

$= 846.45$ N

Basic load rating $C - L^{1/P}$ P (from 3.44

$C = 846.45^{1/3} \times 4751.1848$

$= 44943.373$ N

$C = 4581.8$kgf

From Appendix K, bearing selected at C = 4150, is D = 100, d = 45, No. 6309 For bearing B.

Load = 1209.736 N

Equivalent load $P = XVFr + \psi fa$ (from 3.44)

$= 3.3 \times 1 \times 1209.736 + 2.31 \times 10047.724$

$= 3992.129 + 23210.242$

$= 27202.371$N

Basic load rating $C = L^{1/P} P$

$= 846.45^{1/3} \times 27202.371$

9.459×27202.371

$= 257307.227$ N

$C = 26230$ kgf

The value of C = 26230 kgf could not be read from table, therefore bearing B was selected for use at A

3.7.15 TOOL BAR DESIGN

The tool bar is used for the coupling of either an implement or machine to the tractor draw bar. The size is determined by the size of the implement or machine, while the length is guided by the standard recommended by the ASAE.

The tool bar is normally subjected to a tensile force by the tractor pull at one end and the weight of the implement or machine resisting the pull from the other end. It may fail in tension. (Pandya et al 1976). Using Eulers equation, the critical load on the bar can be determined. The bar is a hollow steel section 50 x 50 x 5 mm.

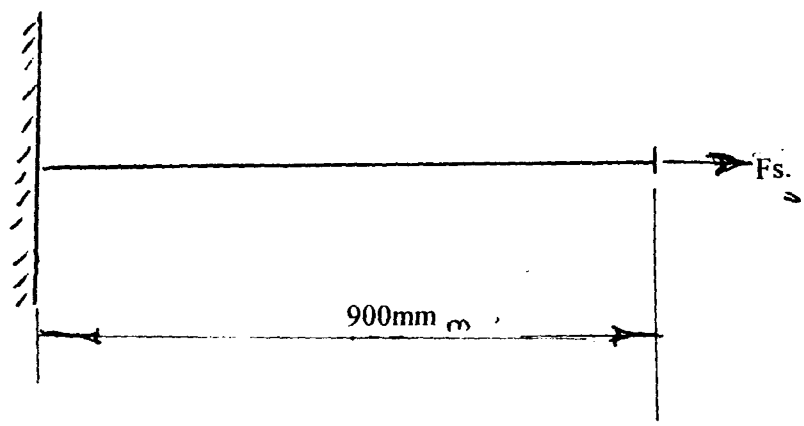

Fig. 3.19 Free body diagram of Tool bar

$$P_{cr} = \frac{\pi^2 EI}{L^2} \qquad 3.40$$

Where P_{cr} = critical load N

E = modulus of elasticity = 207×10^9 GN/M^2

$$I = \text{moment of inertia} = \frac{B^4 - b^4}{12} \quad (B = 50 \text{ mm}, b = 45 \text{ mm}) \text{----- } 3.41$$

L = length of the member = 900 mm.

$$\therefore P_{cr} = \frac{\pi^2 x\ 207\ x\ 10^9\ x}{0.900^2} \frac{[0.05^4 - 0.045^4]}{12}$$

$$= \frac{\pi^2 x\ 207\ x\ 10^9\ x}{0.900^2} \frac{[6.25 \times 10^{-6} - 4.10 \times 10^{-6}]}{12}$$

$$= \frac{\pi^2 x\ 207\ x\ 10^9\ x\ 1.79 \times 10^{-9}}{0.900^2}$$

$$= \frac{365932.542}{0.900}$$

= 406591.719 N

checking the tensile strength

the tensile strength can be calculated by the formula

$$Pcr = (B^2 - b^2)fs \text{ -- } 3.42$$

Were Pcr = critical load.

$(B^2 - b^2)$ – area of square section

fs = tensile stress N/m^2

$$\therefore fs = \frac{Pcr}{(B^2 - b^2)}$$

$$= \frac{406591.189}{0.05^2 - 0.045}$$

= 855981450.5 N/m

$= 855.981 MN/m^2$

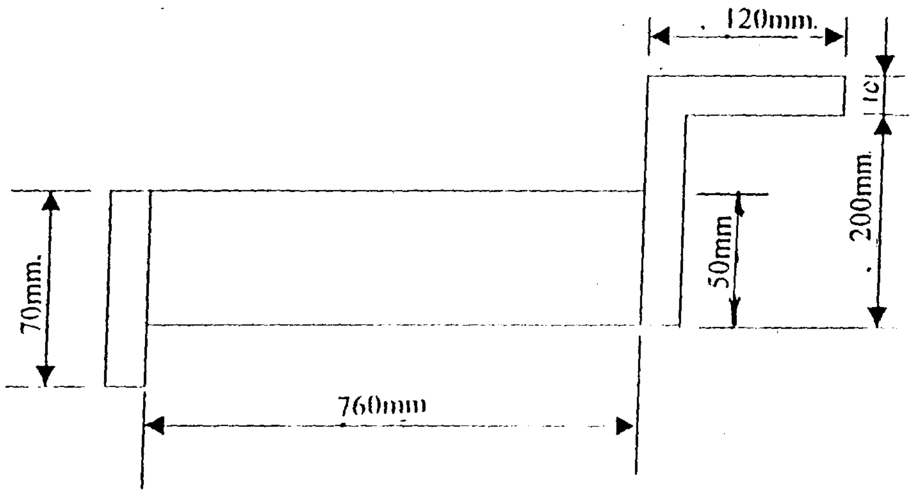

Fig. 3.20 Tool Bar.

3.7.16 LENGTH OF THE TOOL BAR

The length of the tool bar is determined by the length of the P.T.O drive. According to Kepner et al (1982) standard power take off drive has one point of the universal joint connected to P.T.O shaft and the other to the implement shaft. The body of the drive is telescopic consisting of a sleeve with a square bore and a square shaft moving inside the bore.

It is recommended that the hitch point of the tool bar should be midway between the joints so that joint angles would be equal for any turning position of the implements with respect to the tractor. ASAE therefore recommended standard dimensions for a P.T.O drive. This arrangement makes it possible to obtain sufficient telescoping action for sharp turns.

From Table 3.14, dimension A is the distance from the tractor P.T.O to the hitch point of the draw bar and is 356 mm. Form the hitch point to the implement hitch should also be 356 mm with + 50.58 mm. Therefore the tool bar length is 356 + 356 + 50.58 mm = 762.58 mm

Table 3.14 standard power take off drive line relationship (ASAE standard ASAES 203, S204 R 3141973).

	540 r/min	1000 r/min	1000 r/min
Shaft diameter (mm)	35	35	45
Dimension A	356	406	508
Dimension B	-25 to +127	-27 to +127	-25 to 127
Dimension D	(125 to 305 preferred)	(152 to 305)	(229 prefer)
Dimension E	pedestal height should be adjustable for straightest line possible with minimum angles G and H.		

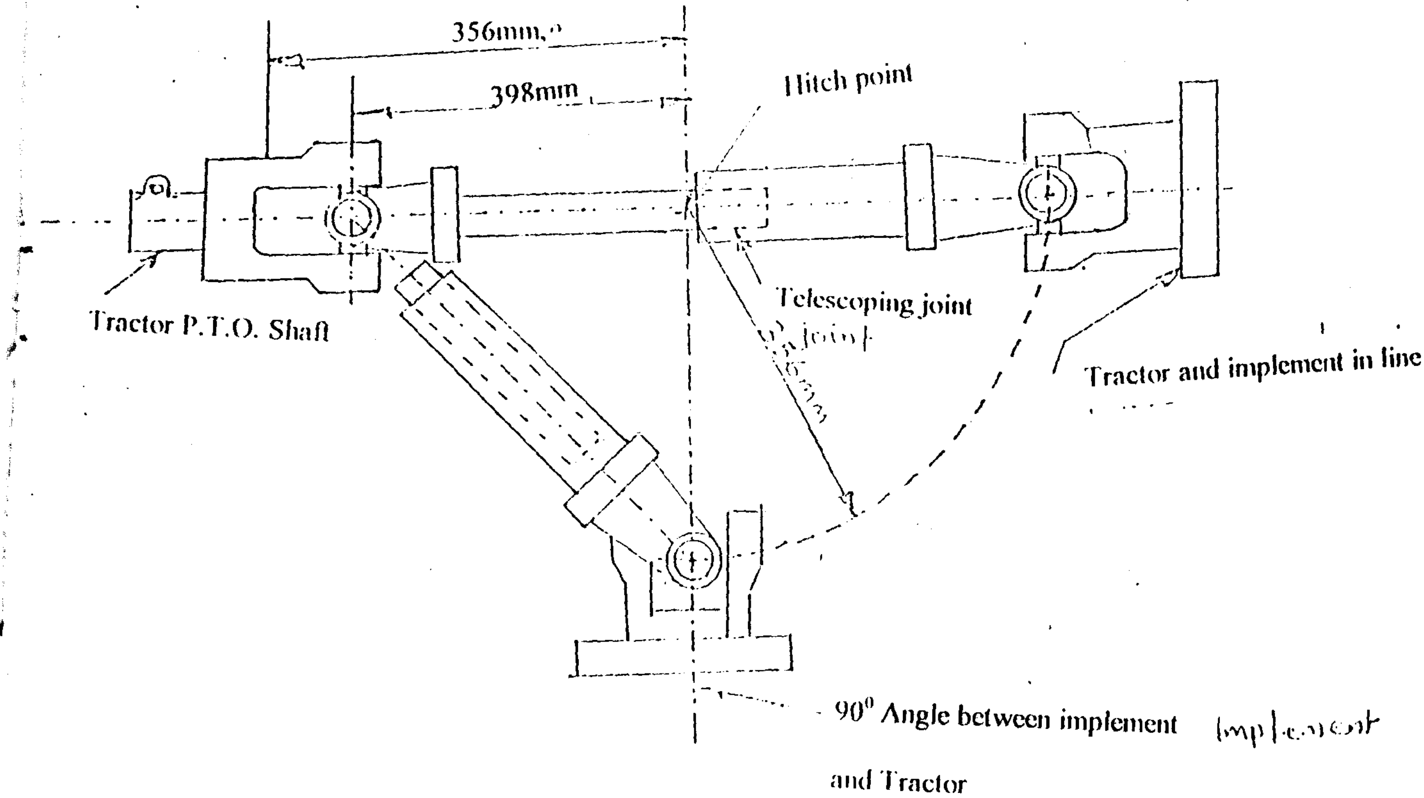

Fig 3.21 Standard Specification of P.T.O Drive

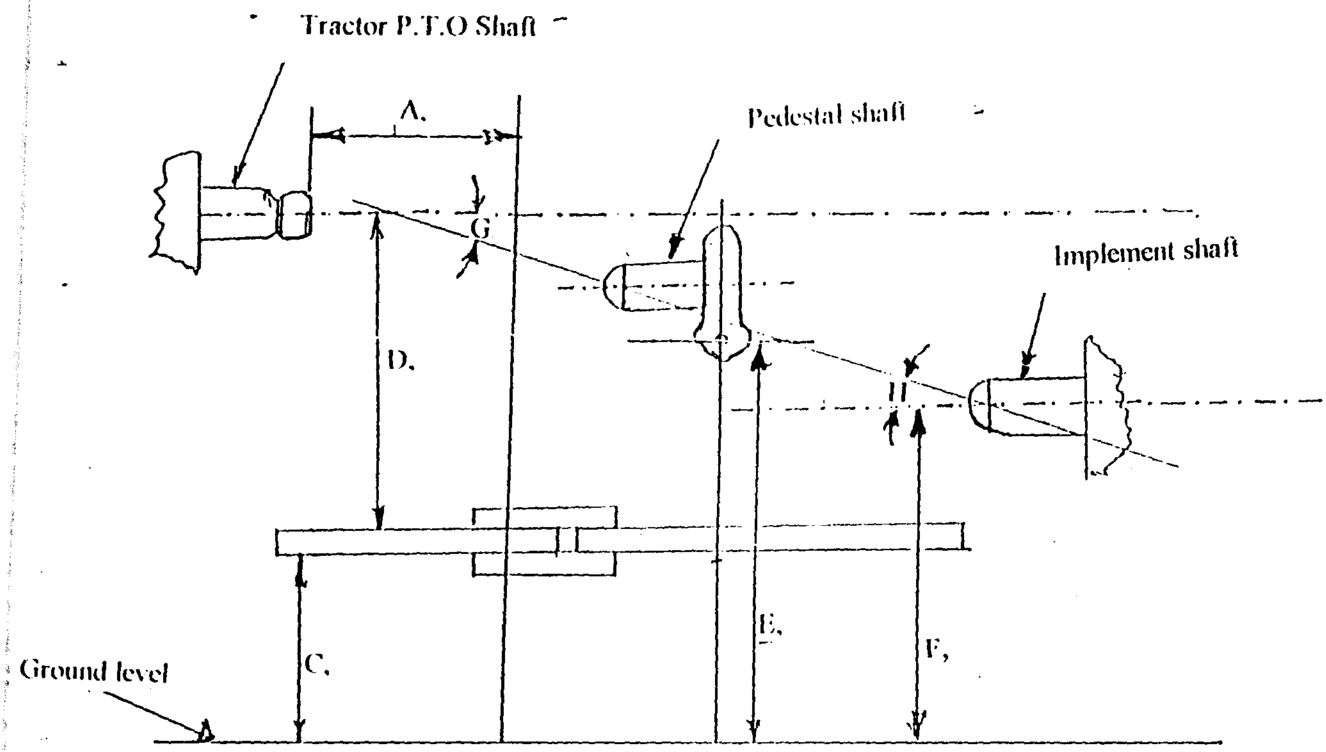

Fig. 3.22 Standard dimension of a P.T.O Drive

3.7.17 TYRE SELECTION AND SPINDLE DESIGN

Most modern tractors and self propelled machine are equipped with rubber tyres which have more advantages over steel wheels. They reduce power requirement, decrease fuel consumption, permit higher speed and reduce vibration, noise and dust.

In general, tyres used on the farm fall into three categories namely traction, steering and implement tyres. Implement tyres which are designed to support the weight of the implement and provide the least amount of rolling resistance was selected for the design.

3.7.17.1 TYRE SIZE

In addition to the selection of tyres according to the type of thread or ribs, tyres are selected according to size. Tyre size is designated by cross sectional diameters and the diameter of the rims (Smith & Wilkes 1980). A tyre size designated as 13.6 – 38 means that the tyre cross sectional diameter is 13.6 cm and a rim diameter of 38cm.

In an afford to aid manufacturers and users of machine, standards have been established by the ASAE for the purpose of providing selection tables of tyres for applications to machines. The major factor considered in the choice of tyres is the weight to be carried by the machine or implement (Appendix M)

3.7.18 WEIGHT OF THE MANURE SPREADER

The total weight of a machine to be carried on the wheels determines. the size of the wheels to be used. Bosoi et al (1988) gave the following as the formula for the calculation of the service (total) mass of a machine.

$Msr = Mm + M_H + Mc + M_B + Mi + M_f + M_0$ -------------- 3.43

Where,

Msr = service mass (total)

Mm, MH, Mc, M_B, Mi, M_f, and M_0 are the masses of the machine, fuel lubricant, water, instrument filling materials (seeds, seedlings fertilizer, others) and service personal respectively.

For the machine, the above formula is modified as follows

$Msr = Mm + m_2$ -- 3.44

Where, Msr = service mass

Mm = mass of machine

M_f = mass of filling material (manure)

From section 3.8.3, Mm = 268kg

M_f = 73.559 kg

$\therefore$ $Msr = Mm + M_f$

= 268 + 73.559

= 341.559kg

Load on the two tyres = 341.559 kg

So the load on each tyre = 170. 780 kg.

Checking Appendix N

Tyre size = 4.00 – 12

Tyre cross sectional diameter = 124

Rim diameter = 412mm

Tyre pressure = 190 kpa

Ply rating = 4

3.7.19 TYRE SPINDLE DESIGN

Wagons, hopper and other load carrying implement tyres are normally carried on axles. Based on the arrangement of the components of the machine, the use of an axle will affect the spreading of the manure therefore, a short spindle was made which had a bracket for attachment to the frame by the use of two bolts.

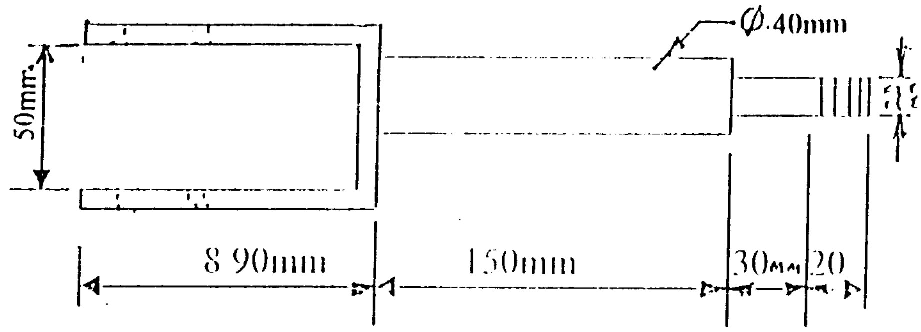

Fig. 3.21 Tyre Spindle

3.8 POWER REQUIREMENT OF THE MANURE SPREADER

In order to determine the size of the tractor that will be required to operate the machine, the power requirement of the machine has to be determined.

3.8.1 DRAFT

Draft is the total force parallel to the direction of travel required to propel the machine/implement. It is the sum of the soil and crop resistance and the implement motion resistance (ASAEEP 496).

$D = R_{sc} + M_R$ .... 3.42 (ASAE EP 496)

Where, D = Machine draft (N)

R_{sc} = Soil and crop resistance (N)

M_R = total implement/machine motion resistance (N).

But $M_R = \sum Rm$

Where M_R = Total implement/machine motion resistance

Rm = Motion resistance reach in individual wheel supporting the machine (N).

Also Rm = 9.8 ρ.m.

Where ρ = Motion resistance ratio

M = Dynamic wheel load (kg).

$$\text{But } \rho = \frac{1}{Bn} + 0.04 + \frac{0.05S}{\sqrt{Bn}} \quad \ldots\ldots\ldots\ldots\ldots\ldots\ldots\ldots\ldots\ldots \; 3.45$$

Where Bn = dimension less ratio

S = slip

$$\text{again } Bn = \frac{(CIbd)}{w}\left\{\frac{1 + 5\,\sigma/h}{1 + 3\,b/d}\right\} \quad \ldots\ldots\ldots\ldots\ldots\ldots\ldots \; 3.46$$

Where, w = dynamic wheel load (KN)

CI = Cone Index

b = Unloaded tyre width (m)

d = Unloaded over all tyre diameter (m)

h = tyre section height (m)

σ = tyre deflection

w = 1.675KN

CI = 900 table

B = 0.060 m

d = 0.5m

h = 0.5m

σ = 0.15

$$S = 0.65$$

$$\therefore Bn = \left(\frac{900 \times 0.05 \times .5}{1.675}\right)\left(\frac{1 + 5 \times \frac{0.15}{0.5}}{1 + 3 \times \frac{0.05}{}}\right)$$

$$Bn = 25.833$$

From eq. 3.51,

$$\rho = \frac{1}{25.833} + 0.04 + \frac{0.05 \times 0.6}{\sqrt{25.833}}$$

$$\rho = 0.085$$

$$\therefore Rm = 9.8 \times 0.085 \times 170.780$$

$$Rm = 142.43N$$

$$M_R = \sum Rm$$

$$= 142.43 \times 2$$

$$M_R = 284.86N$$

Soil and Crop resistance (R_{sc}) is the force parallel to the direction of travel resulting from contact between soil or crop and the machine. It is computed as $R_{sc} = nr_{sc}$ ....3.51 (ASAF EP 497).

Where, n = machine numeric e.g width = 1m

r_{sc} = unit soil and crop resistance = 2.8 (App. P)

$$\therefore R_{sc} = 1 \times 2.8 = 2.8N$$

From eq. – 3.4

Draft (D) = $R_{sc} + M_R$

$= 28 + 284.56N$

$= 287.66N$

Draw bar power of the machine (Pdb) $\frac{D \times S}{3.6}$ 3.47

where, D = Draft = 287.66N

S = Speed = 5.454 km/hr

$\therefore$ Pdb = 2876 x 5.454

Pdb = 0.435 kw

3.8.2 P. T. O. POWER

P. T. O. power is required from the engine to operate the machine and is computed as follows:

P. T. O. = a + bw + cF 3.48

Where, P. T. O = Power take off required by machine

W = Machine working width (1m)

F = Material feed rate = 1451.39 ton/hr

a, b & c machine specific parameters

a = o, b = o, c = 0.2 (Appendix Q)

$\therefore P_{PTO} = 0.0 + o \times 1 + 0.2 \times 7256.95$

$= 1451$ watts

$P_{PTO} = 1.451$ kw

3.8.3 TOTAL POWER

Total power requirement for operating implement/machine is the sum of power component converted to P. T. O. equivalent and is computed as

$$P_T = \frac{Pdb}{E_m E_t} \times P_{PTO} \quad \text{......} \quad 3.49$$

Where, Pdb = draw bar power = 0.435kw

E_t = Tractive efficiency = 0.38 (ASAE EP 496)

E_m = Mechanical Efficiency = 0.96 (ASAE EP 496)

$P_{P.T.O}$ power = 1.451kw

P_T = Total power

$$\therefore P_T = \frac{0.435}{0.38 \times 0.96} + 1.451$$

P_T = 2.643 kw

So the total power required by the machine is 2.643 kw.

3.9 CONSTRUCTION OF COMPONENTS

With the design of all the compound completed, the materials for the construction were soured locally . Some of the components were fabricated in the workshop, while some are standard components and were therefore purchased directly based on the specifications from the design calculations.

Table 3.15 gives the break down of the components, the materials and the construction operations involved and the details of these components are found on drawing sheet No. 1 which is the working drawing of the components of the machine.

Table 3.15 Construction of Components

No	COMPONENTS	MATERIAL	OPERATION
1	Hopper	Metal sheet Guage 18 (2mm)	The sheet metal was marked cut and welded into shape 1000 x 800 x 20 mm
2	Hopper support bars	Flat steel section 50 x 50 x 5 mm	The bar was cut into four pieces of 700 mm and then drilled for bolts
3	Mainframe	Hollow steel section 50 x 50 x 2 mm	The section was cut, drilled and welded into a rectangle 1080 x 800 mm
4	Flail spreader shaft	Solid steel bar with flails 40 mm diameter	The 40 mm diameter shaft was cut to a length of 200 mm and machined at the ends for bearings and pulley.
5	Agitator	Solid shaft 25 mm diameter	The shaft was machined at the ends for pulley and bearings. Bar length is 1100 mm. Spikes were then welded through out the length.
6	Gear box output shaft	Solid shaft 30 mm diameter	The shaft was cut to a length of 540mm. It was machined to diameter of 25 mm.
7	Tyre spindle	Solid shaft 40 mm diameter	Two pieces of length 230mm were cut and machined to a diameter of 40 mm length of 50mm mm was machine to 30 mm for bearing and threaded for nut.
8	Tool bar	Hollow steel section 50 x 50 x 3 mm	This section was cut to 900 mm, a bar was welded for hitching to the draw bar

			point.
9	Beaming housing	Round pipe 60mm inside diameter	The pipe was cut and machined to the beaming outside diameter of 60mm
10	Manure flow regulator	Metal sheet	The sheet metal was cut to a size of 900 x 250 mm and was reinforced by metal bars.

STANDARD COMPONENTS PURCHASED.

1. Telescopic shaft
2. Bearings 6 No
3. Pulleys 3 No
4. Belts 2 No
5. Gear box 1 No.
6. Gear wheels 2 No.
7. Bolts and nuts (various sizes)
8. Idler – 1 No.

3.9.1 ASSEMBLY OF COMPONENTS

After all the components were carefully produced, the next thing that was done was to put all the components together to make up the machine. The assembly operations involved the use of Bolts and nuts mainly. However some components were brought together by welding. At the end of the exercise, a complete manure spreader was developed (fig. 3.22)

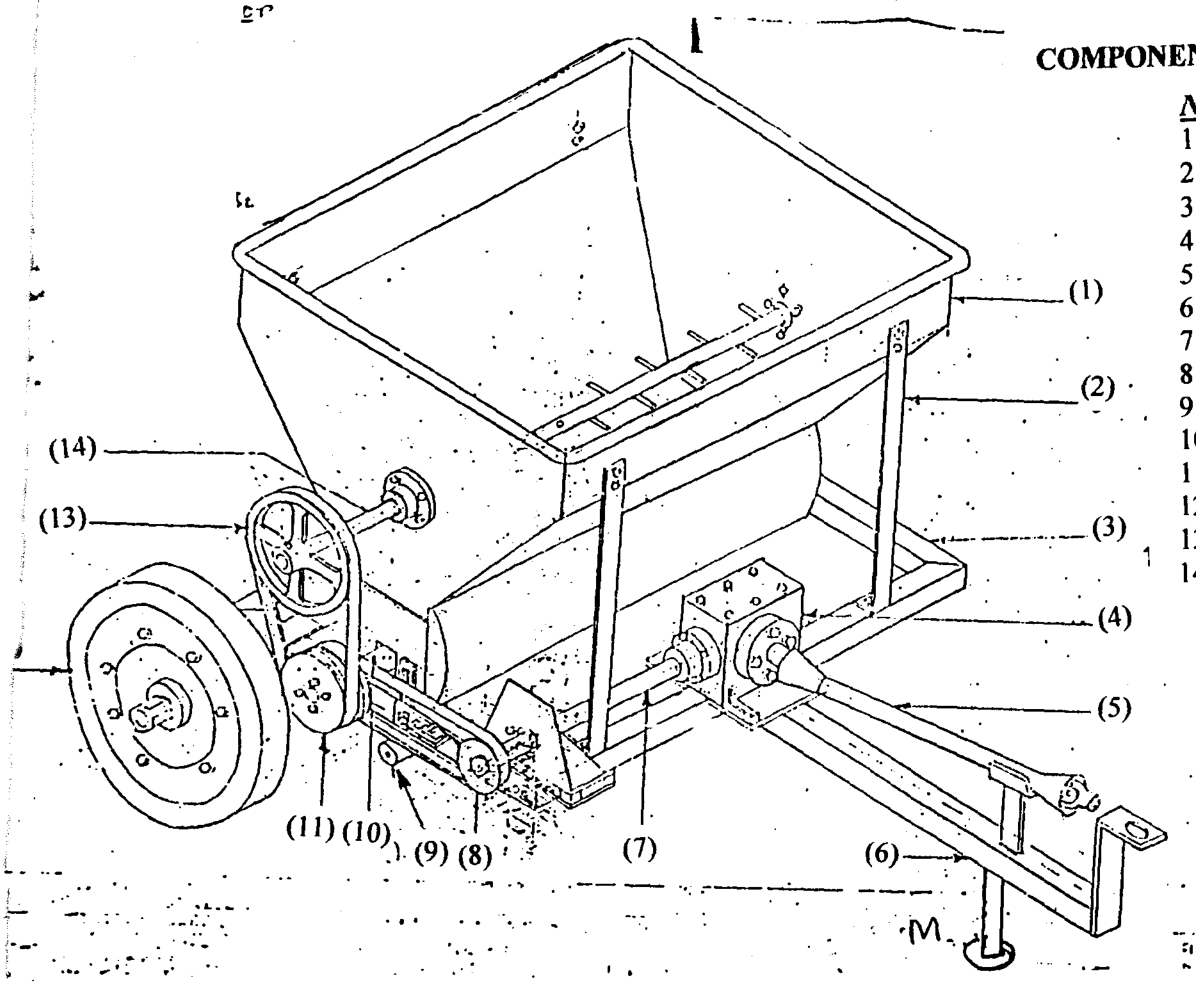

COMPONENTS OF THE MACH

NO PART NAME
1 —Hopper
2 — Hopper Support ba
3 —Frame
4 —Gear box
5 Te[illegible]onic shaft
6 —Tool bar
7 — Gear box out put sl
8 — Driver pulley
9 —Belt idler
10 —Flail sp. shaft
11 —Flail sp. pulley
12 —Spreader wheel
13 —Agitator pulley
14 —Agitator shaft.

Fig. 3.24 The Assembled Machine

3.10 MATERIAL SPECIFICATION AND COSTING

The cost elements of the production of this machine are:-

a. material cost

b. labour cost

c. miscellaneous cost

3.10.1 MATERIAL COST

This is the cost of purchasing the material for the construction of the machine and those components that are considered standard. This materials were source locally.

TABLE: 3.16 COSTING OF MATERIALS

NO	MATERIAL	SPECIFICATION (mm)	QTY	UNIT PRICE	AMOUNT
1.	Metal sheet		1	2200	2200.00
2.	Hollow steel section	5000 x 50 x 50	1	3000	3000.00
3.	Flat steel bar	3600 x 40 x 3	1	800.0	800.00
4.	Solid shaft	1000 x 40	1	800.0	800.00
5.	Solid shaft	2500 x 25	1	600.0	650.00
6.	Flat bar	310 x 50 x 10	1	300.0	270.00
7.	Gear	Standard	2	700.0	15200.00
8.	Gear box	Standard	1	600.0	6000.00
9.	Rim and tyre + tube	Standard	2 set	1500	3000.00
10.	Telescopic shaft	Standard	1	10,000	10,000
11.	Bearings	Standard	8	100	800
12.	Bolts nuts (various size)	Standard	45	10.00	450.00
13	Belts		2	300	600.00
	Total				24670

3.10.2 LABOUR COST

This is the cost of the labour put in the production of the machine. It is recommended that 30% cost of materials should be considered as labour cost.

The total cost of material was found to be N24,670

therefore labour cost $= \frac{30 \times 24670}{100} = 7{,}401$

= N 7,401.00

3.10.3 MISCELLENOUS COST

This is the cost incurred which does not fall within the material or labour cost. Such cost involve transportation, purchasing electrodes photographs etc, it is broken into the following

	Item	Amount (₦)
1.	purchasing of electrodes	1,000.00
2.	purchasing of diesel and Engine oil	500.00
3.	payment for cow dung and compost making	1500
4.	photographs of compost and machine	1300
	Total	₦ 5000.00

The total cost of producing the machine is the sum of material, labour and miscellaneous costs.

Total costs = 24670 + 7401 + 5000

= N 37,071

3.11 TESTING OF THE MACHINE.

The manure spreader was tested after all the components were perfectly put together. Two tests were conducted on the machine.

1. mechanical performance
2. field performance

3.11.1 MECHANICAL PERFORMANCE TEST

This test was conducted to determine the working of the components. The machine was hitched to the tractor draw bar. The telescopic shaft was connected to the tractor P.T.O shaft and then operated.

The observation made was that of two of the flails touching part of the hopper. This was corrected by adjusting the hopper. After the correction, all the parts of the machine were moving freely. It was therefore found to be mechanically alright for field testing.

4.11.2 FIELD PERFORMANCE TEST

ASAE standard 341.2 which is the procedure for measuring uniformity and calibration of granular broadcast spreader was adopted for the field test of this machine. The purpose of this standard is to establish a uniform method of determining and reporting performance data on broadcast spreaders designed to apply granular material to the soil. Tests performed according to this standard makes it possible to predict field performance of the spreader and to compare spreader distribution pattern.

3.11.3 TEST PROCEDURE

THE MATERIAL

The material to be used for the test is a processed cow dung (composted manure) with a bulk density of 781.499 kg/m^3 and moisture content of about 40%.

THE FIELD

A field representing a field condition for normal use was selected for the test. 100 metres was marked and demarcated as the test distance to be covered (ASAE S341.2)

THE TEST

The test consists of three parts:

1. to determine the rate of application
2. to determine the field capacity
3. to determine the distribution pattern by measuring the applied material.
4. efficiency of discharge.

1. Determination of application rate

The preferred method of determining application rate is by measuring the amount exiting the spreader during operation over a known area (ASAE: S341.2).

Procedure :

a. 75 kg of the manure was loaded into the hopper of manure spreader

b. The spreader was moved to the 100m marked. The P.T.O was engaged as the tractor starts moving and stopped after covering the 100m distance.

c. Ten runs were made and the following readings were obtained.

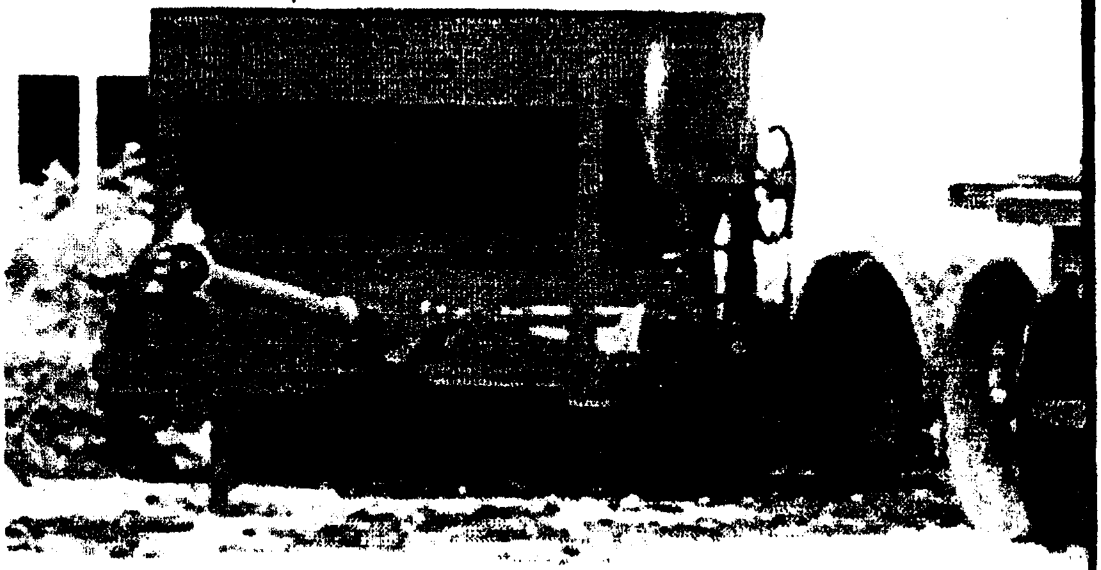

Plate X The Complete Manure Spreader

Plate XI The Manure Spreader During testing

Table 3.17: Field test results

Runs (N)	Distance (m)	(xi)Time taken (sec)	Width of spreading	Quantity (kg)	Quantity spread (kg)
1.	100	67.34	1.10	75	65.4
2.	100	67.00	1.08	75	63.3
3.	100	66.45	1.10	75	63.5
4.	100	66.50	1.08	75	65.4
5.	100	68.10	1.08	75	66.5
6.	100	65.81	1.10	75	64.6
7.	100	64.34	1.15	75	63.4
8.	100	63.52	1.10	75	63.6
9.	100	65.40	1.09	75	64.5
10.	100	66.41	1.08	75	65.2
Mean value (x) = Σxi/N		66.06	1.096		64.54

a) Rate of application

Rate of application can be calculated from the formula

$$R = \frac{QK}{LW} \quad \text{---------------- 3.55 (ASAE S341.2)}$$

Where R = application rate (kg/ha)

Q = weight applied (kg) = (72.24 kg)

W = swath width = (1.09 m)

K = constant = (10,000)

L = distance spreader operated = (100 m)

$$\therefore \; R = \frac{64.54 \times 10{,}000}{100 \times 1.096}$$

$$= \frac{645400}{109.6}$$

= 5888.686 kg/ha.

= 5.887 tons/ha.

b) Field capacity of the machine.

The capacity of a machine is the rate at which it can cover a field while performing its intended function or useful work. Usually expressed in ha/hr. it is calculated using the formula.

C = s x w ------------------------------------ (3.50) (Hunt. 1972)

Where C = field capacity (ha/hr).

S = speed of machine (km/hr)

W = width of work (m)

From Table 3.16

Distance covered = 100 m

Time taken = 66.06 seconds

$$\text{Speed} = \frac{\text{distance}}{\text{Time}} = \frac{100}{66.06 \text{ seconds}} \quad \text{------------------------------------} \quad (3.51)$$

= 1.513 m/s

= 5.450 km/hr

width of spreading = 1.096 m

$\therefore$ C = 5.450 x 1.096 [km/hr x m/1]

$$\frac{5.973\text{m}^2}{\text{hr}} \times \frac{1}{10}$$

C = 0.597ha./hr.

c) The spread pattern test.

The spread pattern test indicates the degree of uniformity of distribution of material across the swath being spread.

Procedure .

a. The 100m test distance was divided into 10 equal parts of 10 m each.

b. The spreader was run once and the quantity spread at each of the ten meters was gathered and weight

The following results were obtained.

The coefficient of variation (cv) is used to determine and express the uniformly of distribution of application.

The mean value, standard deviation and CV is determined as follows.

$$\text{Mean } x = \frac{\Sigma xi}{N} \quad \text{------------------------} \quad 3.52$$

$$\text{Standard deviation} = [\Sigma(xi - x)]^2]^{1/2} \quad \text{------------------------} \quad 3.53$$

$$CV = \frac{(\text{standard deviation})\ (100)}{X} \quad \text{------------------------} \quad 3.54$$

Table 3.18 (A) Spreading Pattern Test Result

Sample	1	2	3	4	5	6	7	8	9	10
Qty (Xi)	6.5	6.5	6.9	6.8	6.7	6.7	6.5	6.4	6.4	6.3

$$\text{Mean } (\bar{X}) = 60.1/10$$

$$= 6.01$$

Considering the figures on Table 3.18 (A)

Table 3.18 (B) Spreading Pattern Test Result

No	Xi	X	Xi – X	(Xi - X)^2
1.	6.5	6.01	0.49	0.2401
2.	6.5	6.01	0.49	0.2401
3.	6.9	6.01	0.59	0.7921
4.	6.8	6.01	0.79	0.6241
5.	6.7	6.01	0.69	0.4761
6.	6.7	6.01	0.69	0.4761
7.	6.5	6.01	0.49	0.2401
8.	6.4	6.01	0.39	0.1521
9.	6.4	6.01	0.39	0.1521
10.	6.3	6.01	0.29	0.0841
X = 6.01				

$$\text{Mean } X = \frac{\Sigma Xi}{N}$$

$X = 6.01$

$$\text{Standard deviation} = \frac{(\Sigma[Xi - X]^2)^{1/2}}{N - 1}$$

$$= \frac{(3.4768)^{1/2}}{10 - 1}$$

$$= 6.621$$

$$CV = (\text{standard deviation})\,\frac{(100)}{X}$$

$CV = 10.34$

d) Efficiency of Discharge

The efficiency of spreading of the machine was determined by collecting what is left in the hopper after each run, weighing it and subtracting from the quantity in the hopper before the run.

From Table 3.16

The quantity of manure in the hopper is 75 kg for each run.

After ten runs the average quantity applied is 64.54 kg

The efficiency of discharge $E_s = \frac{\text{quantity applied}}{\text{quantity in hopper}} \times 100\%$ ------- 3.55

$$= \frac{64.54}{75} \times \frac{100}{1}$$

$$Es = 86.05\%$$

Table 3.19;Test Result With Various Openings Of Hopper

S/no.	Distance (m)	Area of opening (m^2)	Quantity of manure applied (kg)
1.	100	Fully opened (0.18)	64.54
2.	100	¾ opened (0.135)	46.405
3.	100	½ opened (0.09)	30.27
4.	100	¼ opened (0.045)	16.26
5.	100	Fully closed 00	00

Table 3.20:Test Results With Various Forward Speeds of the Tractor

Distance (m)	Time (Sec)	Speed (m/s)	Quantity discharged (kg)
100	16.50	6.06	200.16
100	33.05	3.03	129.05
100	49.54	2.02	96.80
100	66.26	1.51	64.54
100	82.76	1.21	40.40

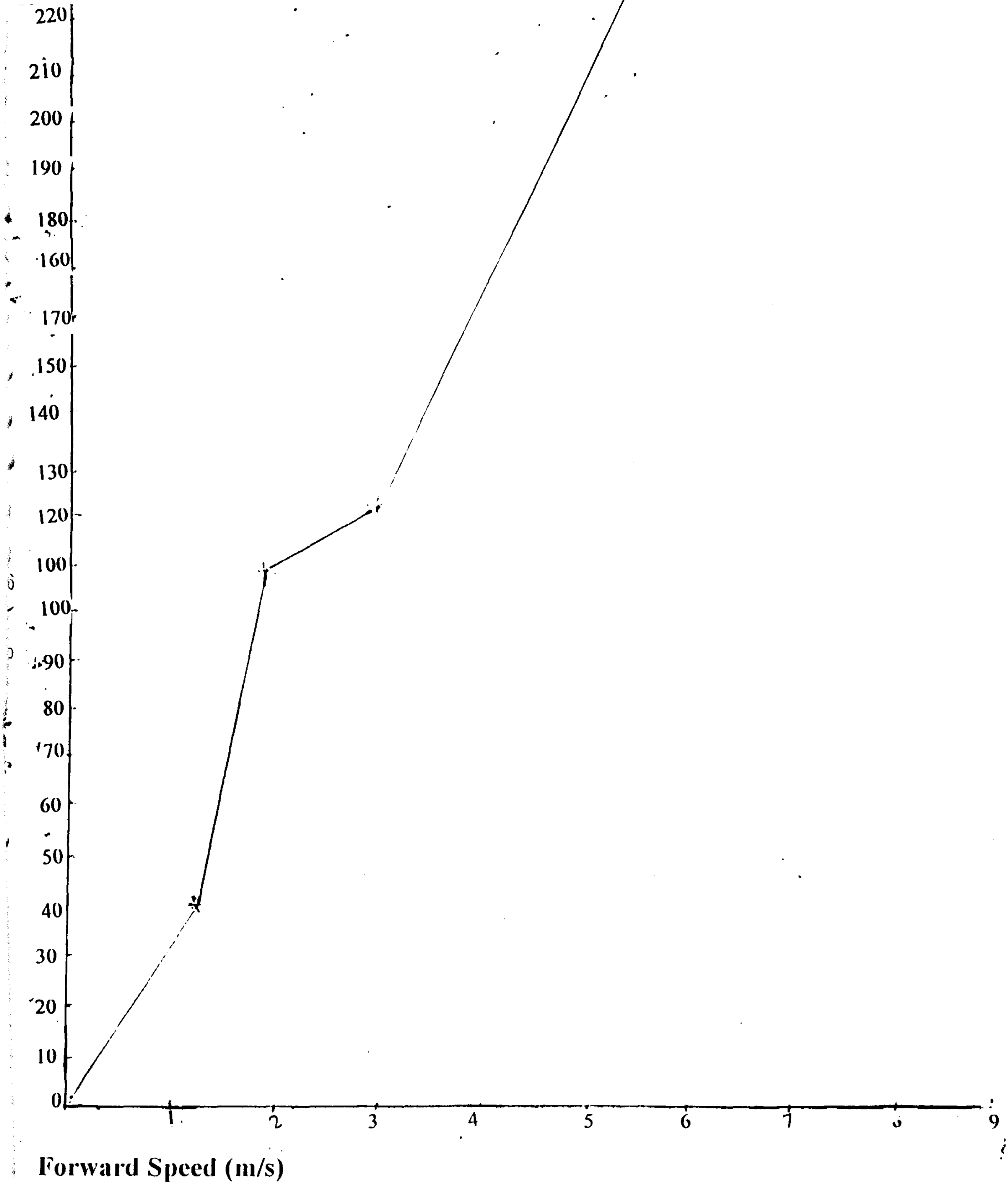

Fig. 3.25 Graph of Quantity Discharged Against Forward Speed

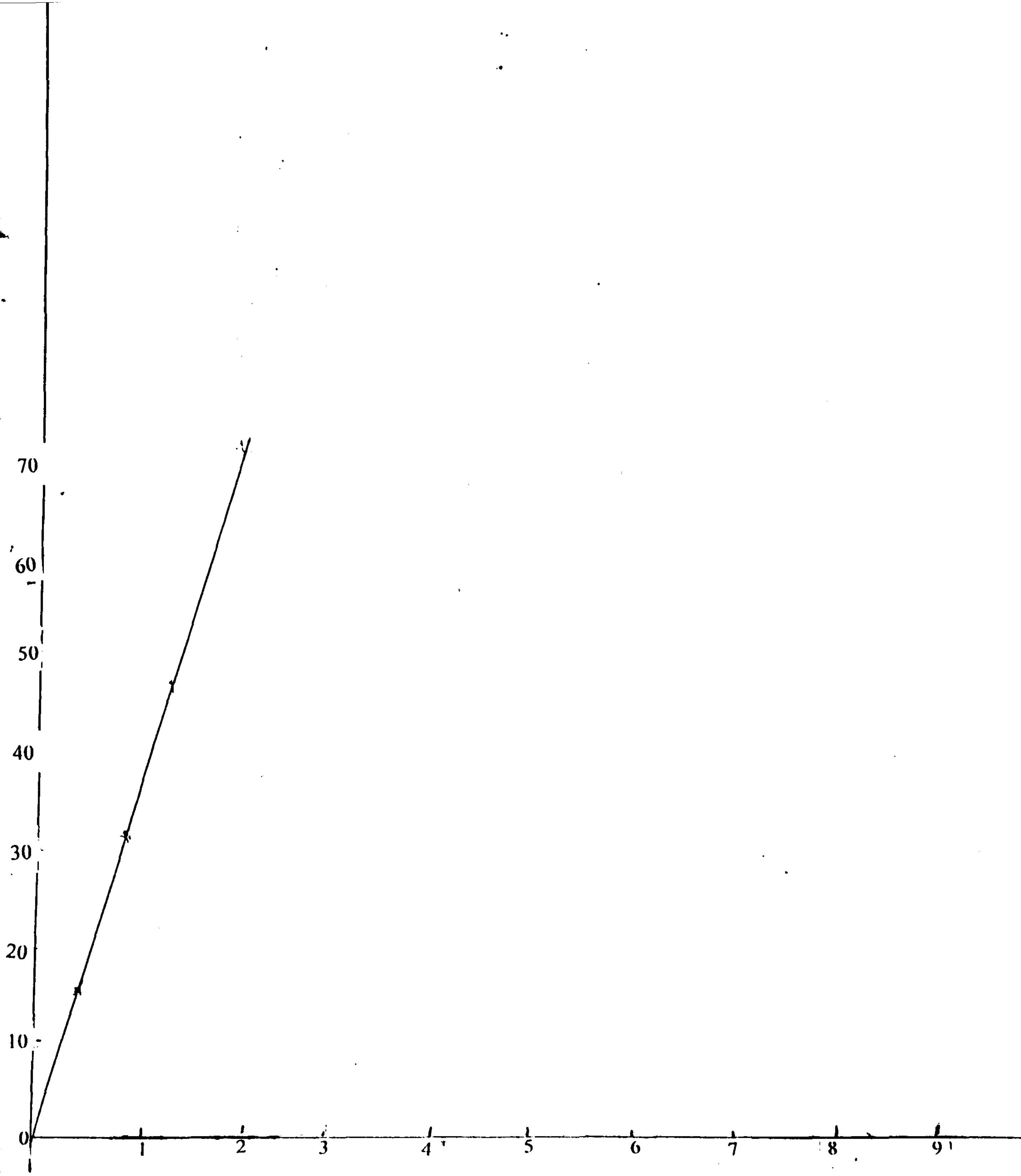

Hopper Opening (Area m²)

Fig. 3.26 Graph of Quantity Discharged Against Hopper Opening

CHAPTER FOUR

4.0 RESULTS AND DISCUSSION

In the course of the design this machine, the following areas were investigated and the results are as follows:

4.1 AMOUNT OF ANIMAL DUNG PRODUCED IN THE COUNTRY

The two major source of animal dung in Nigeria and the estimated quantities are:

a) All the animal in Nigeria = 30,825,760 tons/annum

b) From three abattoirs in Kaduna = 50,679 tons/annum

From the rough estimate above, it was realized that quite a lot of dung is produce in the country, however, with respect to "a" above, only a small percentage of the 30,825,760 tones/annum of the dung is utilized as most of its scattered as animal move from place to place is search of food.

On the other hand, quite a lot of dung is produced in the abattoirs all over the country as shown on plates V VI and VII which are examples from three abattoirs in Kaduna. It was also discovered that only small quantities are used by individual farmer. The major hindrance to its use was attributed to difficulty of transporting it to the farm and spreading it.

4.2 PROPERTIES OF MANURE

The following properties of the processed manure were determined and the data obtained was used as the design parameters for the components of the machine.

a) Bulk density = 791.994 kglm^3

b) Angle of repose = 42^0

c) Coefficient of friction = 0.88

d) Moisture content = 44%

e) pH = 7.7

These properties have values close to what is presented in Appendix P as presented by Bosoi, et al (1988). The slight differences in these values is attributed to the differences in the composition of the materials making up the manure. The value of the angle of repose was used for obtaining the shape of the hopper for easy flow of the manure, so also was the coefficient of friction. The bulk density was used in determining the capacity of the hopper. The pH determines the corrosive nature of the manure to enable the selection and treatment of the material for the construction of the hopper to guard machine against corrosion. The moisture content was also determined to knot the best condition for application for proper flow and uniformity spreading. So these properties were taken into consideration during the design of the machine components.

4.3 TEST RESULTS

The completed machine was tested for the following and the results are as follows.

a) Rate of application = 5.887 tons/ha

b) Field capacity = 0.557 ha/hr

c) Uniformity of spreading (Cv) = 10.34%

d) Efficiency of discharge = 86.05%

The rate of application of 5.887 tons/ha was achieved when 64.54kg of manure is discharged from the hopper covering a distance of 100 meters and a width of 1.096 meters. Changing the opening of the hopper changes the rate of application of the manure per hectare as shown in fig 4.1

The field capacity of 0.597 ha/hr was achieved when the machine was operated at a forward speed of 5.450 km/hr covering a width of 1.096m. altering the speed will alter the field capacity (fig. 4.2).

Therefore, hopper opening and speed determine the rate of application of the manure respectively. Both rate of application and field capacity are small compared to what is obtainable from the available spreaders, however, these values are adequate for a prototype model. Better results can be achieved when further work is undertaken on it.

The uniformity of spreading was given in terms of the coefficient of variation as recommended by ASAE. The coefficient of variation was found to be 10.30% which is within the acceptable limit of between 10-12% as reported by Gomez and Gomes (1986) for fertilizer trial, by this, it can be said that the distribution was fairly uniform and the efficiency of spreading of 86% was also good.

CHAPTER FIVE

5.0 CONCLUSION AND RECOMMENDATION

5.1 CONCLUSION

The objective of developing a manure spreader locally has been achieved in this research.. The results of field capacity of 0.597 ha/hr, rate of application of 5888.686 kg/ha and an efficiency of discharge of 86% adequate for a prototype machine. However, further work is required to improve upon the results obtained above, after which a bigger capacity spreader can be produced to handle larger hecterage of land.

5.2 RECOMMENDATION

Its has been stated earlier further work is required to improve the performance of the machine as this is the first stage of its production from the results obtained the following observations were made and recommendations suggested.

a. The manure agitator which is a shaft with spikes should be changed to left and right hand screw auger which will help in improving the flow of material.

b. The speed of 915rpm at the spiral spreader which is recommended by Shippen et al (1980) is too high for this design, as a result of which the centrifugal action of the rotation of the flails affects the free flow of the manure. It is recommended that the speed is reduced to 600 rpm through increasing the diameter of the driving pulley.

REFERENCES

Akinsanmi O. (1975) Certificate Agric. Science Longman group Ltd UK, P. 51

Albert, H, D. Yeshwant and H. Mildord (1931) The waste of Agriculture Oxford University Press India, P. 47-105

Alexandrov, M. P. (1981) Material Handling Equipment, MIR Publishers Moscow. P 176.

Allen, H., A. R. Holowenko, and H. G. Laughlin (1980) Theory and Problems of machine design McGraw Hill Publishers London (Schaums outline series) P. 113-144.

Archer, J. (1993) Crop Nutrition and Fertilizer Farming Press Books Wharfedale Road. U.K, 142 PP.

ASAE Standards (1998) American Society Automotive Engineering Handbook 45th Edition, St Joseph, U.S.A. P. 849

Bell, B. (1996), Farm machinery, Farming Press Ltd, 2 Wharfedale Road U. K. 142 pp.

Bosoi, E. S, O. V Verniaer, I. I Sminor and E. E Subtanshack (1988), Theory, Construction and Calculation of Agricultural Machines Vol.1, Mashinostroenic Publishers Moscow P. 295

Cooke, G.W (1980) Fertilizing for Maximum Yielding, English Language Book Society/Collins Great Britain, Publisher IIED London U. K. P. 235.

Geoffrey, B. and L. Kristopherson (1985) Agricultural Resideu as Fuel in the Third World. IIED Publishers London. P. 98-128.

Handa, D. (1987), Design Data Book, Satya. Prakashar Publishers New

Hunt, D. (1972):Farm Power and Machinery Management. Iowa State University Press, Ames Iowa. USA. P4-5

Green, J. (1979) Freams Elements of Agriculture, John Murray Publishers Ltd London. P167-177.

Kaul, R. N and C.B. Egbo (1985) Introduction to Agricultural mechanization 1st Edition Macmillan Publishers Ltd. London, P205.

Kepner R. A, R. Bainer, and E. L Barger (1982), Principles of Farm machinery, 3rd Edition, AVI Publisher Inc. Conneticut U.S.A. P. 470-476.

Lil Jedahl, J.B, W.L Carleton P. K Turnquist and D.W. Smith (1989) Tractor and Their Power Units, 3rd Edition, John Willey and Sons Inc. U.S.A P. 256.

Lovegrove, H. T. (1968) Crop Production Equipment, Anchor Press Ltd, Great Britain P. 104-126.

Malhota D. P. and H. C. Gupta (1973) Strength of Materials 4th Edition Satya Prakashan Publishers New Delhi India. P. 176-190.

Mohsenin, N. (1986) Properties of Plant and Animal Material Gordon and Breach Sc. Publ. New York. P. 450.

N. L. P. D (1985) Animal Population in Nigeria, NLPD Publication.

Raymond, W. M. and D. L. Roy (1992) Introduction to soil and Plant Growth, 6th Edition, Printice Hall Publishers, New Delhi, India P. 560.

Resheton, D. N (1978) Machine Design, MIR Publishers Russia P. 186-220.

Shippen, J. M, C. R Ellin, C. H. Clover. (1980) Basic Farm Machinery Pergamon Press U. S. A. P. 181-183

Sidney, R. (1963) Soil Mechanics Batsford Publishers Ltd, London. P. 18

Singh, T.P and B. Singh (1995) Design and Development of animal drawn Engine operated reaper. AMA, Vol. 26 No, 2. P. 29-35.

Smith, H. P and S. H. Wilkes (1980) Farm Machinery and Equipment 6th Edition, McgrawHill Publishers, London. P. 27-285.

Spivakorsky, A. and V. Dyachkov. (1983) Conveying Machines, MIR Publishers Moscow P. 131.

Spot, M. F (1980) Design of Machine Elements, 6th Edition Prentice – Hall Publishers, New Delhi India P. 260.

Surendra, S. (1982) Strength of Materials, 2nd Edition Vikas Publishing House, PVT Ltd, New Delhi, India. P. 118-125.

Stone A.A and H.E Gulvin (1979) Machine for Power Farming, 3rd Edition, John Willey and Sons, New York, U.S.A. P.266-278

Ulysses, S. J (1982) Fertility and Soil Fertility Reston Publishing Co. Inc Virginia, U.S.A P. 254.

Vann, O. (1986) Soil Fertility. John Willey & Sons, New York. P. 18.

Yawalkar K. S. J. P Agarwal and C. Bokde (1965) Manure and Fertilizer. Agricultural Horticultural Publishing House India. P. 28-51.

APPENDIX A

DISTRIBUTION OF ANIMALS IN NIGERIA

No	State	Cattle	Sheep	Goat	Donkeys	Horses	Carmels	Pigs
1.	Ak/Ibom	7000	576000	816000	-	-	-	89000
2.	Anambra	64000	426000	1.4670000	-	-	-	62000
3.	Bauchi	1.732000	2.811000	3.465000	96000	13000	-	536000
4.	Benue	146000	864000	2.432000	-	-	-	703000
5.	Bendel	47000	737000	1.248000	-	-	-	180,000
6.	Borno	2.727000	2.424000	3.188000	181,000	88000	27000	76000
7.	C/River	10.000	117000	351000	-	-	-	68000
8.	Gongola	1.503000	1.324000	1.97000	50.000	10,000	-	476000
9.	Imo	13000	495000	1.281000	-	-	-	8,000
10.	Kaduna	998000	441000	866000	15000	2000	-	229000
11.	Kano	999000	2.059000	2.490000	106000	23000	7000	-
12.	Katsina	625000	1.553000	2.009000	153000	23000	7000	-
13.	Kwara	563000	843000	1.152000	26000	1000	-	80.600
14.	Lagos	3000	57000	158000	-	-	-	25000
15.	Niger	1.165000	732000	969000	26000	3000	-	81000
16.	Ogun	27000	340.000	905000	-	-	-	150,000
17.	Ondo	9000	589000	1.747000	-	-	-	291,000
18.	Oyo	296000	863000	1.859000	1000	-	-	178,000
19.	Plateau	1.054000	904000	1.865000	28000	3000	-	536,000
20.	Rivers	3100	509000	67000	-	-	43000	66000
21.	Sokoto	1.769000	2.546000	2.449000	247000	24000	87000	21000
	Total	**13761000**	**21,230000**	**33867000**	**929000**	**200000**		**336700**

Source : NLPD Kaduna 1995

APPENDIX B

NUMBER OF ANIMALS SLAUGHTERED AT TUDUN WADA KADUNA ABATTOIR MONTHLY.

MONTH	ANIMAL				
	SEX	CATTLE	CAMEL	SHEEP	GOAT
January	Male	150	5	73	50
	Female	51	3	17	15
February	Male	170	7	90	65
	Female	80	6	44	20
March	Male	235	9	126	90
	Female	60	4	60	70
Aril	Male	193	8	101	75
	Female	8O	4	70	40
May	Male	235	8	120	101
	Female	60	5	67	59
June	Male	190	7	103	110
	Female	70	5	50	70
July	Male	180	4	48	45
	Female	60	2	10	10
August	Male	204	7	16	110
	Female	100	5	40	50
September	Male	250	20	210	150
	Female	100	8	50	50
October	Male	250	10	150	99
	Female	55	3	50	51
	TOTAL	2775	130	1640	1330
	MEAN	277.0	13.00	164.0	133.0

APPENDIX C

NUMBER OF ANIMALS SLAUGHTERED AT KAKURI ABATTOIR KADUNA .

MONTH	ANIMAL				
	SEX	CATTLE	CAMEL	SHEEP	GOAT
January	Male	80	4	50	60
	Female	40	2	25	20
February	Male	73	5	63	75
	Female	27	3	17	38
March	Male	101	6	80	63
	Female	59	3	40	41
April	Male	85	5	77	57
	Female	40	2	33	24
May	Male	75	7	85	60
	Female	40	4	43	40
June	Male	103	5	85	68
	Female	72	3	52	22
July	Male	90	4	70	50
	Female	60	1	20	25
August	Male	82	6	89	66
	Female	48	3	55	34
September	Male	95	9	121	70
	Female	50	3	65	45
October	Male	100	7	95	65
	Female	40	4	65	35
	Total	1320	86	1230	958
	Mean				

APENDIX D

NUMBER OF ANIMALS SLAUGHTERED KAWO ABATTOIR AT KADUNA.

MONTH	ANIMAL				
	SEX	CATTLE	CAMEL	SHEEP	GOAT
January	Male	200	9	120	80
	Female	70	4	45	30
February	Male	185	8	155	95
	Female	75	5	60	30
March	Male	196	10	173	123
	Female	84	6	77	81
April	Male	170	11	150	97
	Female	85	6	71	54
May	Male	162	12	166	125
	Female	73	4	84	71
June	Male	210	10	190	130
	Female	100	6	75	85
July	Male	197	8	200	95
	Female	120	4	90	45
August	Male	230	10	189	141
	Female	133	7	87	68
September	Male	185	23	230	150
	Female	101	10	90	72
October	Male	199	15	210	155
	Female	115	5	83	65
	Total	2890	173	2545	179.2
	Mean	289.00	17.3	254.5	179.2

APPENDIX E:AMOUNT OF DUNG PRODUCED BY EACH ANIMAL SLAUGHTERED AT THE ABATTOIRS.

AMOUNT OF DUNG (KG)				
SAMPLE	CATTLE	CAMEL	SHEEP	GOAT
1	4.30	3.50	1.40	1.00
2	4.20	3.60	1.20	1.25
3	4.30	3.45	1.45	1.30
4	4.00	3.70	1.60	1.20
5	3.90	3.80	1.30	1.10
6	4.25	3.65	1.25	1.00
7	4.20	4.00	1.45	1.25
8	4.50	3.90	1.40	1.30
9	4.25	3.75	1.36	1.35
10	4.35	3.40	1.25	1.40
Total				
Mean	4.23	3.68	1.37	1.22

APPENDIX F

COMMONLY USED CROSS SECTIONAL PROPERTIES

Section of beam I = moment of inertia

Z = section modulus = $\frac{I}{C}$

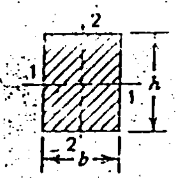

$$I_{1-1} = \frac{bh^3}{12} \qquad I_{2-2} = \frac{b^3h}{12}$$

$$Z_{1-1} = \frac{bh^2}{6} \qquad Z_{2-2} = \frac{b^2h}{6}$$

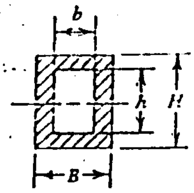

$$I = \frac{BH^3 - bh^3}{12}$$

$$Z = \frac{BH^3 - bh^3}{6H}$$

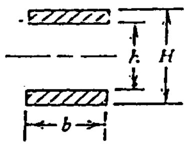

$$I = \frac{b}{12}(H^3 - h^3)$$

$$Z = \frac{b}{6H}(H^3 - h^3)$$

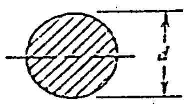

$$I = \frac{\pi d^4}{64} = 0.0491d^4$$

$$Z = \frac{\pi d^3}{32} = 0.0982d^3$$

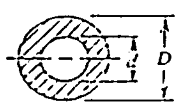

$$I = \frac{\pi}{64}(D^4 - d^4) = 0.0491(D^4 - d^4)$$

$$Z = \frac{\pi}{32D}(D^4 - d^4) = 0.0982\frac{D^4 - d^4}{D}$$

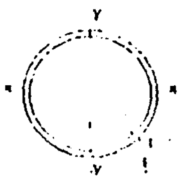

Plastic modulus	Torsional constants J	Torsional constants C
cm³	cm⁴	cm³
206	4772	436
367	6919	640
430	7107	667
634	0009	793
001	10690	967
796	12620	1143
360	6892	647
440	0321	601
660	10150	830
073	12200	1000
037	16070	1232
1611	17010	1465
440	9392	600
602	11700	857
692	14310	1040
049	17330	1274
[illegible]	21410	1669
1233	26600	1076
643	30260	2216
795	19820	1224
966	24320	1601
213	29690	1833
510	36700	2271
060	44200	2734
230	62000	3260
067	20400	1406
195	32450	1826
177	30700	2233
147	49330	2774
165	60500	336
38	71350	4013
72	40060	2409
40	00060	2066
40	74000	3600
39	00800	4472
2	109400	6304
7	132900	6639
8	70100	3071
0	86200	3770
3	107800	4723
2	131400	6740
1	160000	8061
1	194000	8491
7	220000	10000

APPENDIX G

HOLLOW SECTIONS

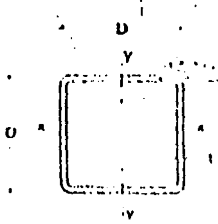

SQUARE HOLLOW SECTIONS

DIMENSIONS AND PROPERTIES

Designation Size D × D	Designation Thickness t	Mass per metre	Area of section	Moment of inertia	Radius of gyration	Elastic modulus	Plastic modulus	Torsional constants J	Torsional constants C
mm	mm	kg	cm²	cm⁴	cm	cm³	cm³	cm⁴	cm³
20 × 20	2.0	1.12	1.42	0.70	0.73	0.70	0.86	1.22	1.07
	2.6	1.39	1.70	0.88	0.70	0.80	1.16	1.44	1.23
30 × 30	2.6	2.21	2.82	3.49	1.11	2.33	2.88	6.60	3.30
	3.2	2.66	3.30	4.00	1.09	2.67	3.37	8.46	3.76
40 × 40	2.6	3.03	3.86	8.94	1.62	4.47	5.30	14.0	6.31
	3.2	3.66	4.60	10.4	1.60	5.22	6.40	16.6	7.33
	4.0	4.46	5.68	12.1	1.46	6.07	7.61	19.6	8.50
60 × 60	3.2	4.60	5.94	21.6	1.91	8.62	10.4	[illegible]	12.4
	4.0	5.72	7.20	26.5	1.87	10.2	12.6	[illegible]	14.1
	5.0	6.97	8.88	29.8	1.83	11.9	13.9	47.0	16.7
60 × 60	3.2	6.67	7.22	38.7	2.31	12.9	16.3	60.1	18.9
	4.0	6.97	8.88	46.1	2.28	15.4	18.6	72.4	22.1
	6.0	8.64	10.9	64.4	2.24	18.1	22.3	86.3	26.1
70 × 70	3.6	7.40	9.60	69.6	2.70	19.9	23.8	108	28.2
	5.0	10.1	12.9	90.4	2.64	26.7	31.2	142	30.1
80 × 80	3.6	8.59	10.9	108	3.11	28.6	31.3	164	30.6
	5.0	11.7	14.9	130	3.06	34.7	41.7	217	40.0
	6.3	14.4	18.4	166	3.00	41.3	50.5	261	50.4
90 × 90	3.6	9.72	12.4	164	3.62	34.1	40.0	237	49.
	5.0	13.3	16.9	202	3.46	46.0	53.8	317	64.8
	6.3	16.4	20.9	242	3.41	53.9	66.3	381	77.1
100 × 100	4.0	12.0	15.3	243	3.91	46.8	54.9	361	60.2
	5.0	14.8	18.9	283	3.87	56.6	67.1	439	81.9
	6.3	18.4	23.4	341	3.81	68.2	82.0	533	97.0
	8.0	22.9	[illegible]	400	3.74	81.6	99.9	646	118
	10.0	27.0	36.6	474	3.66	94.9	118	761	134
120 × 120	5.0	18.0	22.9	603	4.69	83.0	98.4	776	122
	6.3	22.3	28.6	610	4.63	102	121	949	147
	8.0	27.9	36.6	738	4.60	123	149	1160	176
	10.0	34.2	43.6	870	4.47	146	178	1381	208

APPENDIX II

—NOMINAL DIMENSIONS OF V-BELTS

Section		in. Width	in. Depth	mm Width	mm Depth
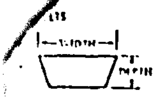	HA	0.50	0.31	12.7	7.9
	HB	0.66	0.41	16.7	10.3
	HC	0.88	0.53	22.2	13.5
	HD	1.25	0.75	31.8	19.0
	HE	1.50	0.91	38.1	23.0
DOUBLE V-BELTS 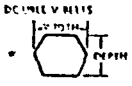	HAA	0.50	0.41	12.7	10.3
	HBB	0.66	0.53	16.7	13.5
	HCC	0.88	0.69	22.2	17.5
	HDD	1.25	1.00	31.8	25.4
ADJUSTABLE SPEED BELTS 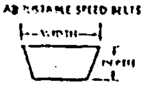	HI	1.00	0.50	25.4	12.7
	HJ	1.25	0.59	31.8	15.0
	HK	1.50	0.69	38.1	17.5
	HL	1.75	0.78	44.4	19.8
	HM	2.00	0.88	50.8	22.2

—EFFECTIVE LENGTHS OF AGRICULTURAL ADJUSTABLE SPEED BELTS

All Cross Sections HI, HJ, HK, HL, & HM in.	mm	Length Tolerance in.		mm	
60	1524				
64	1626				
68	1727	+0.4	-0.9	+10	-23
72	1829				
76	1930				
80	2032				
84	2134				
88	2235	+0.5	-1.0	+13	-25
92	2337				
96	2438				
104	2642	+0.5	-1.0	+13	-25
112	2845	+0.6	-1.1	+15	-28
120	3048	+0.6	-1.2	+15	-30
128	3251	+0.6	-1.3	+15	-33
136	3454	+0.6	-1.3	+18	-36
144	3658	+0.7	-1.5	+18	-38

TABLE 2—EFFECTIVE LENGTHS OF AGRICULTURAL V-BELTS AND DOUBLE V-BELTS

V-Belt Cross Sections HA in.	HA mm	HB in.	HB mm	HC in.	HC mm	HD in.	HD mm	HE in.	HE mm	Double V-Belt Cross Sections HAA in.	HAA mm	HBB in.	HBB mm	HCC in.	HCC mm	HDD in.	HDD mm
28.1	714																
3.1	841																
5.1	892																
7.1	942	37.9	963														
0.1	1018	40.9	1039														
4.1	1120	44.9	1140														
8.1	1222	48.9	1242														
0.1	1272	50.9	1293														
3.1	1349	53.9	1369	55.2	1402					53.1	1349	53.9	1369	55.2	1402		
5.1	1399	55.9	1420														
7.1	1450	57.9	1471									57.9	1471				
.1	1577	62.9	1598	64.2	1631					62.1	1577	62.9	1598	64.2	1631		
.1	1628	64.9	1648														
.1	1679	66.9	1699														
.1	1730	68.9	1750														
.1	1780	70.9	1801	72.2	1834					70.1	1780	70.9	1801	72.2	1834		
.1	1867	73.9	1877														
.1	1958	77.9	1979	79.2	2012					77.1	1958	77.9	1979	79.2	2012		
.1	2034	80.9	2055														
1	2985									82.1	2085						
		83.9	2131									83.9	2131	85.2	2164		
		85.9	2182	85.2	2164												
1	2212	87.9	2233	89.2	2266					87.1	2212	87.9	2233	89.2	2266		
1	2339	92.9	2360	94.2	2393					92.1	2339	92.9	2360	94.2	2393		
1	2492			100.2	2545					98.1	2492			100.2	2545		
		99.9	2537									99.9	2537				
1	2720	107.9	2741	109.2	2774					107.1	2720	107.9	2741	109.2	2774		
1	2898	114.9	2918	116.2	2951					114.1	2898	114.9	2918	116.2	2951		
1	3101	122.9	3122	124.2	3155	125.2	3180			122.1	3101	122.9	3122	124.2	3155	125.2	3180
1	3304	130.9	3325	132.2	3358	133.2	3383			130.1	3304	130.9	3325	132.2	3358	133.2	3383
		138.9	3528	140.2	3561												
		146.9	3731	148.2	3764	149.2	3790					146.9	3731	148.2	3764	149.2	3790
		160.9	4087	162.2	4120	163.2	4145					160.9	4087	162.2	4120	163.2	4145
				166.2	4221	167.2	4247							166.2	4221	167.2	4247
		175.9	4468	177.2	4501	178.2	4526					175.9	4468	177.2	4501	178.2	4526
		182.9	4646	184.2	4679	185.2	4704	187.0	4750			182.9	4646	184.2	4679	185.2	4704
		197.9	5027	199.2	5060	200.2	5085	202.2	5131			197.9	5027	199.2	5060	200.2	5085
		212.9	5408	214.2	5441	215.2	5466	217.0	5512			212.9	5408	214.2	5441	215.2	5466
		241.4	6132	242.2	6152	242.7	6165	243.5	6185			241.4	6132	242.2	6152	242.7	6165
		271.4	6894	272.2	6914	272.7	6927	273.5	6947			271.4	6894	272.2	6914	272.7	6927
		301.4	7656	302.22	7676	302.7	7689	303.5	7709			301.4	7656	302.2	7676	302.7	7689
				332.2	8438	332.7	8451	333.5	8471					332.2	8438	332.7	8451
				362.2	9200	362.7	9213	363.5	9233					362.2	9200	362.7	9213

APPENDIX I

Deep Groove Ball Bearing (*Series 60*)

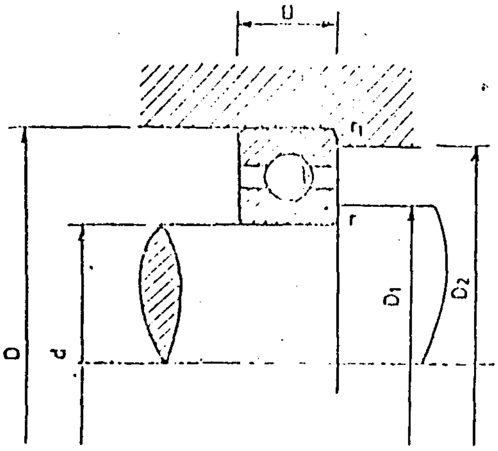

Bearing of basic design no. (SKF/FAG)	d mm	D_1 min	D mm	D^2 max	B mm	r ≈ mm	r_1 mm	Basic capacity, kgf Static Co	Dynamic C	Max permissible speed rpm
6000	10	12	26	24	8	0.5	0·3	190	360	20000
6001	12	14	28	26	8	0·5	,,	220	400	20000
6002	15	17	32	30	9	0·5	,,	255	440	20000
6003	17	19	35	33	10	0·5	,,	285	465	20000
6004	20	23	42	36	12	1	0·6	450	735	16000
6005	25	28	47	44	12	1	,,	520	780	16000
6006	30	35	55	50	13	1·5	1·0	710	1040	13000
6007	35	40	62	57	14	1·5	,,	880	1250	13000
6008	40	45	68	63	15	1·5	,,	980	1320	10000
6009	45	50	75	70	16	1·5	,,	1270	1630	10000.
6010	50	55	80	75	16	1·5	,,	1370	1700	8000
6011	55	61	90	84	18	2	,,	1800	2200	8000
6012	60	66	95	89	18	2	,,	1930	2280	8000
6013	65	71	100	94	18	2	,,	2120	2400	8000
6014	70	76	110	104	20	2	,,	2550	3000	6000
6015	75	81	115	109	20	2	,,	2800	3100	6000
6016	80	86	125	119	22	2	,,	3350	3750	6000
6017	85	91	130	124	22	2	,,	3600	3900	5000
6018	90	97	140	133	24	2·5	1·5	4150	4550	5000
6019	95	102	145	138	24	2·5	,,	4500	4750	5000
6020	100	107	150	143	24	2·5	,,	4500	4750	4000
6021	105	114	160	151	26	3	2	5400	5700	4000
6022	110	119	170	161	28	3	,,	6100	6400	4000
6024	220	129	180	171	28	3	,,	6550	6700	3000
6026	130	139	200	191	33	3	,,	8300	8300	3000
6028	140	149	210	201	33	3	,,	9000	8650	3000
6030	150	160	225	215	35	3·5	,,	10400	9800	2500
6032	160	170	240	230	38	3·5	,,	11800	11200	2500
6034	170	180	260	250	42	3·5	,,	14300	13200	2500
6036	180	190	280	270	46	3·5	,,	16600	15800	2000
6038	190	200	290	280	46	3·5	,,	18000	15300	2000
6040	200	210	310	300	51	3·5	,,	20000	17000	2000

Deep Groove Ball Bearing (Series 62)

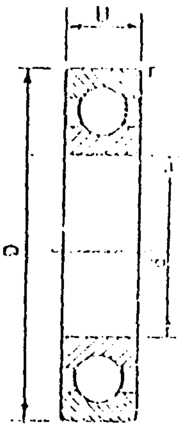

ISI No.	Bearing of basic design No. (SKF/FAG	d mm	D_1 min	D mm	D_2 max	B mm	r ≈ mm	r_1 mm	Basic Capacity, kgf		Max. permissible speed rpm
									Static Co	Dynamic C	
10 BC 02	6200	10	14	30	26	9	1	0·6	224	400	20000
12 BC 02	6201	12	16	32	28	10	1	0·6	300	540	20000
15 BC 02	6202	15	19	35	31	11	1	0·6	355	610	16000
17 BC 02	6203	17	21	40	36	12	1	0·6	440	750	16000
20 BC 02	6204	20	26	47	41	14	1·5	1·0	655	1000	16000
25 BC 02	6205	25	31	52	46	15	1·5	1·0	710	1100	13000
30 BC 02	6206	30	36	62	56	16	1·5	1·0	1000	1530	13000
35 BC 02	6207	35	42	72	65	17	2	1·0	1370	2000	10000
40 BC 02	6208	40	47	80	73	18	2	1·0	1600	2280	10000
45 BC 02	6209	45	52	85	78	19	2	1·0	1830	2550	8000
50 BC 02	6210	50	57	90	83	20	2	1·0	2120	2750	8000
55 BC 02	6211	55	64	100	91	21	2·5	1·5	2600	3400	8000
60 BC 02	6212	60	69	110	101	22	2·5	1·5	3200	4050	6000
65 BC 02	6213	65	74	120	111	23	2·5	1·5	3550	4400	6000
70 BC 02	6214	70	79	125	116	24	2·5	1·5	3900	8400	5000
75 BC 02	6215	75	84	130	121	25	2·5	1·5	4250	5200	5000
80 BC 02	6216	80	91	140	129	26	3	2·0	4550	5700	5000
85 BC 02	6217	85	96	150	139	28	3	2·0	5500	6550	4000
90 BC 02	6218	90	101	160	149	30	3	2·0	6300	7500	4000
95 BC 02	6219	95	107	170	158	32	3·5	2·0	7200	8500	4000
100 BC 02	6220	100	112	180	168	34	3·5	2·0	8150	9650	3000
105 BC 02	6221	105	117	190	178	36	3·5	2·0	9300	10400	3000
110 BC 02	6222	110	122	200	188	38	3·5	2·0	10400	11200	3000
120 BC 02	6224	120	132	215	203	40	3·5	2·0	10400	11400	3000
	6226	130	144	230	216	40	4	2·5	11600	12200	2500
	6228	140	154	250	236	42	4	2·5	12900	12900	2500
	6230	150	164	270	256	45	4	2·5	14300	137000	2500
	6232	160	174	290	276	48	4	2·5	15600	143000	2000
	6234	170	187	310	293	52	5	3·0	19000	166000	2000
	6236	180	197	320	303	52	5	3·0	20400	176000	1600
	6238	190	207	340	323	55	5	3·0	24000	200000	1600
	6240	200	217	360	343	58	5	3·0	26500	212000	1600

D_1, abutment diam. on shaft. D_2, abutment diam. on housing.
r_1, corner radii on shaft and housing.

Deep Groove Ball Bearings (Series 63)

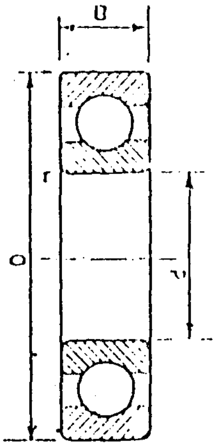

ISI No.	Bearing of basic design No (SKF/FAO)	d mm	D_1 min	D mm	D_2 max.	B mm	r ≈ mm	r_1 mm	Basic Capacity, kgf: Static Co	Basic Capacity, kgf: Dynamic C	Max. permissible speed rpm
10 BC 03	6300	10	14	35	31	11	1	0·6	360	630	16000
12 BC 03	6301	12	18	37	31	12	1·5	1	430	765	16000
15 BC 03	6302	15	21	42	36	13	1·5	1	520	880	16000
17 BC 03	6303	17	23	47	41	14	1·5	1	630	1060	13000
20 BC 03	6304	20	27	52	45	15	2	1	765	1250	13000
25 BC 03	6305	25	32	62	55	17	2	1	1040	1660	10000
30 BC 03	6306	30	37	72	65	19	2	1	1460	2200	10000
35 BC 03	6307	35	44	80	71	21	2·5	1·5	1760	2600	8000
40 BC 03	6308	40	49	90	81	23	2·5	1·5	2200	3200	8000
45 BC 03	6309	45	54	100	91	25	2·5	1·5	3000	4150	8000
50 BC 03	6310	50	61	110	99	27	3	2·0	3550	4800	6000
55 BC 03	6311	55	66	120	109	29	3	2·0	4250	5600	6000
60 BC 03	6312	60	72	130	118	31	3·5	2·0	4800	6400	5000
65 BC 03	6313	65	77	140	128	33	3·5	2·0	5500	7200	5000
70 BC 03	6314	70	82	150	138	35	3·5	2·0	6300	8150	5000
75 BC 03	6315	75	87	160	148	37	3·5	2·0	7200	9000	4000
80 BC 03	6316	80	92	170	158	39	3.5	2·0	8000	9650	4000
85 BC 03	6317	85	99	180	166	41	4	2·5	8800	10400	4000
90 BC 03	6318	90	104	190	176	43	4	2·5	9800	11200	3000
95 BC 03	6319	95	109	200	186	45	4	2·5	11200	12000	3000
100 BC 03	6320	100	114	215	201	47	4	2·5	13200	13700	3000
105 BC 03	6321	105	119	225	211	49	4	2·5	14300	14300	2500
110 BC 03	6322	110	124	240	226	50	4	2·5	16600	16000	2500
120 BC 03	6324	120	134	260	246	55	4	2·5	17000	16300	2500
	6326	130	147	280	263	58	5	3	19600	18000	2500
	6328	140	157	300	283	62	5	3	22400	20000	2000
	6330	150	167	320	303	65	5	3	25500	21600	2000

D_1, abutment diam. on shaft D_2, abutment diam. on shaft and housing
r_1, corner radii on shaft and housing

BALL AND ROLLER BEARINGS

Deep Groove Ball Bearing (Series 64)
(Nomenclature same as in other Bearings)

No	d mm	D_1 mm	D mm	D_2 max.	B mm	r mm	r_1 mm	Basic Capacity, kgf Static Co	Basic Capacity, kgf Dynamic C	Max speed rpm
6403	17	26	62	53	17	2	1	1280	1800	10000
6404	20	29	72	63	19	2	1	1650	2400	8000
6405	25	36	80	69	21	2·5	1·5	2000	2825	7100
6406	30	41	90	79	23	2·5	1·5	2400	3350	6300
6407	35	46	100	89	25	2·5	1·5	3250	4300	5600
6408	40	53	110	97	27	3	2	3800	5000	5000
6409	45	58	120	107	29	3	2	4650	5850	4500
6410	50.	64	130	116	31	3·5	2	5300	7000	4000
6411	55	69	140	126	33	3·5	2	6400	7850	4000
6412	60	74	150	136	35	3·5	2	7100	8450	3600
6413	65	79	160	146	37	3·5	2	8000	9150	3200
6414	70	86	180	164	42	4	2·5	9100	10000	2800
6415	75	91	190	174	45	4	2·5	10160	12000	2800
6416	80	96	200	184	48	4	2·5	12800	13000	2500
6417	85	105	210	190	52	5	3	13800	13800	2500
6418	90	110	225	205	54	5	3	16600	15200	2200

Table 3.14. Deep Groove Ball Bearings (With Filling Slots)
(Nomenclature same as in other bearings)

No	d mm	D_1 min	D mm	D_2 max	B mm	r mm	r_1 mm	Basic capacity kgf Static Co	Basic capacity kgf Dynamic C	Max speed rpm
203	17	21	40	36	12	1	0·6	640	950	16000
204	20	26	47	41	14	1·5	1	950	1400	14000
205	25	31	52	46	15	1·5	1	1140	1500	12000
206	30	36	62	56	16	1·5	1	1570	2100	10000
207	35	42	72	65	17	2	1	2100	2800	8000
208	40	47	80	73	18	2	1	2600	3300	7100
209	45	52	85	78	19	2	1	2820	3500	7100
210	50	57	90	83	20	2	1	3000	3650	6300
211	55	64	100	91	21	2·5	1·5	3860	4450	5600
212	60	69	110	101	22	2·5	1·5	4750	5400	5000
213	65	74	120	111	23	2·5	1·5	5700	6400	4500
214	70	79	125	116	24	2·5	1·5	6100	6700	4500
215	75	84	130	121	25	2·5	1·5	6500	7000	4000
216	80	91	140	129	26	3	2	7750	8200	4000

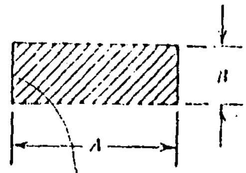

Hot-Rolled Rectangular Steel Bars (ISO 1035/III)

Nominal Size = A × B mm	in.
10 × 3	0.394 × 0.118
4	× 0.157
5	× 0.197
6	× 0.236
7	× 0.276
12 × 3	0.472 × 0.118
4	× 0.157
5	× 0.197
6	× 0.236
7	× 0.276
8	× 0.315
14 × 3	0.551 × 0.118
4	× 0.157
5	× 0.197
6	× 0.236
7	× 0.276
8	× 0.315
16 × 3	0.630 × 0.118
4	× 0.157
5	× 0.197
6	× 0.236
7	× 0.276
8	× 0.315
10	× 0.394
18 × 3	0.709 × 0.118
4	× 0.157
5	× 0.197
6	× 0.236
7	× 0.276
8	× 0.315
10	× 0.394
20 × 3	0.787 × 0.118
4	× 0.157
5	× 0.197
6	× 0.236
7	× 0.276
8	× 0.315
10	× 0.394
12	× 0.472
15	× 0.591
16	× 0.630
18	× 0.709
22 × 3	0.866 × 0.118
4	× 0.157
5	× 0.197
6	× 0.236

Nominal Size = A × B mm	in.
22 × 7	0.866 × 0.276
8	× 0.315
10	× 0.394
12	× 0.472
15	× 0.591
18	× 0.709
25 × 3	0.984 × 0.118
4	× 0.157
5	× 0.197
6	× 0.236
7	× 0.276
8	× 0.315
10	× 0.394
12	× 0.472
14	× 0.551
15	× 0.591
16	× 0.630
18	× 0.709
28 × 3	1.102 × 0.118
4	× 0.157
5	× 0.197
6	× 0.236
7	× 0.276
8	× 0.315
10	× 0.394
12	× 0.472
15	× 0.591
18	× 0.709
30 × 3	1.181 × 0.118
4	× 0.157
5	× 0.197
6	× 0.236
7	× 0.276
8	× 0.315
10	× 0.394
12	× 0.472
14	× 0.551
15	× 0.591
16	× 0.630
18	× 0.709
20	× 0.787
25	× 0.984
32 × 3	1.260 × 0.118
4	× 0.157
5	× 0.197
6	× 0.236
7	× 0.276
8	× 0.315

Nominal Size = A × B mm	in.
32 × 10	1.260 × 0.394
12	× 0.472
15	× 0.591
16	× 0.630
18	× 0.709
20	× 0.787
25	× 0.984
35 × 3	1.378 × 0.118
4	× 0.157
5	× 0.197
6	× 0.236
7	× 0.276
8	× 0.315
10	× 0.394
12	× 0.472
14	× 0.551
15	× 0.591
16	× 0.630
18	× 0.709
20	× 0.787
25	× 0.984
30	× 1.181
32	× 1.260
40 × 3	1.575 × 0.118
4	× 0.157
5	× 0.197
6	× 0.236
7	× 0.276
8	× 0.315
10	× 0.394
12	× 0.472
14	× 0.551
15	× 0.591
16	× 0.630
18	× 0.709
20	× 0.787
25	× 0.984
30	× 1.181
32	× 1.260
45 × 4	1.772 × 0.157
5	× 0.197
6	× 0.236
7	× 0.276
8	× 0.315
10	× 0.394
12	× 0.472
14	× 0.551
15	× 0.591
16	× 0.630

Nominal Size = A × B mm	in.
45 × 18	1.772 × 0.709
20	× 0.787
25	× 0.984
30	× 1.181
32	× 1.260
50 × 3	1.969 × 0.118
4	× 0.157
5	× 0.197
6	× 0.236
7	× 0.276
8	× 0.315
10	× 0.394
12	× 0.472
14	× 0.551
15	× 0.591
16	× 0.630
18	× 0.709
20	× 0.787
22	× 0.866
25	× 0.984
30	× 1.181
32	× 1.260
35	× 1.378
40	× 1.575
55 × 4	2.165 × 0.157
5	× 0.197
6	× 0.236
7	× 0.276
8	× 0.315
10	× 0.394
12	× 0.472
15	× 0.591
18	× 0.709
20	× 0.787
25	× 0.984
30	× 1.181
32	× 1.260
60 × 4	2.362 × 0.157
5	× 0.197
6	× 0.236
7	× 0.276
8	× 0.315
10	× 0.394
12	× 0.472
14	× 0.551
15	× 0.591
16	× 0.630
18	× 0.709
20	× 0.787

Nominal Size = A × B mm	in.
60 × 25	2.362 × 0.984
30	× 1.181
32	× 1.260
35	× 1.378
40	× 1.575
45	× 1.772
65 × 4	2.559 × 0.157
5	× 0.197
6	× 0.236
7	× 0.276
8	× 0.315
10	× 0.394
12	× 0.472
15	× 0.591
16	× 0.630
18	× 0.709
20	× 0.787
25	× 0.984
30	× 1.181
32	× 1.260
35	× 1.378
40	× 1.575
45	× 1.772
70 × 4	2.756 × 0.157
5	× 0.197
6	× 0.236
7	× 0.276
8	× 0.315
10	× 0.394
12	× 0.472
15	× 0.591
16	× 0.630
18	× 0.709
20	× 0.787
25	× 0.984
30	× 1.181
32	× 1.260
35	× 1.378
40	× 1.575
45	× 1.772
50	× 1.969
75 × 4	2.953 × 0.157
5	× 0.197
6	× 0.236
7	× 0.276
8	× 0.315
10	× 0.394
12	× 0.472
15	× 0.591

Nominal Size = A × B mm	in.
75 × 16	2.953 × 0.630
18	× 0.709
20	× 0.787
25	× 0.984
30	× 1.181
32	× 1.260
35	× 1.378
40	× 1.575
45	× 1.772
50	× 1.969
80 × 4	3.150 × 0.157
5	× 0.197
6	× 0.236
7	× 0.276
8	× 0.315
10	× 0.394
12	× 0.472
14	× 0.551
15	× 0.591
16	× 0.630
18	× 0.709
20	× 0.787
25	× 0.984
30	× 1.181
32	× 1.260
35	× 1.378
40	× 1.575
45	× 1.772
50	× 1.969
60	× 2.362
90 × 5	3.543 × 0.197
6	× 0.236
7	× 0.276
8	× 0.315
10	× 0.394
12	× 0.472
14	× 0.551
15	× 0.591
16	× 0.630
18	× 0.709
20	× 0.787
25	× 0.984
30	× 1.181
32	× 1.260
35	× 1.378
40	× 1.575
45	× 1.772
[illegible]	× 1.969
60	× 2.362

APPENDIX N

Code	Tire type
I-1	Rib tread
I-2	Moderate traction
I-3	Traction tread
I-6	Smooth tread

Tire type nomenclature

[illegible] – Diagonal (bias) ply agricultural implement tires (SI metric units)

Basic tire loads for speeds 40 km/h and under (see footnote 2)

Tire size designation		Basic tire loads (kg) at various cold inflation pressures (kPa)									
		170	190	220	250	280	300	330	360	390	410
*4.00-9	SL#	165	180	200	220	230	250(4)				
*4.00-12	SL	205	225	245	270	285	307(4)				
4.00-15	SL	240	270	290	315	335	355(4)				
4.00-18	SL	265(2)	295	320	350	375	400(4)				
*5.00-15	SL	330	365	405	437(4)						
5.50-16	SL	410	455	495	530(4)						
*5.90-15	SL	385	430	470	515(4)						
*6.00-16	SL	465	515	560(4)	610	655	690(6)				
6.40-15	SL	435	480	530(4)	570	610	650	690(6)			
*6.50-16	SL	520	580	640	690	740	775(6)				
*6.70-15	SL	480	535	580(4)	635	680	73[illegible](6)				
7.50-10	SL	505	560	610	670(6)						
7.50-14	SL	555	615(4)								
*7.50-16	SL	670	750(4)	820	885	950	1005	1065	1120	1175	1215(10)
7.50-18	SL	700	780	855	925(6)						
*7.50-20	SL	720	800(4)	880	950(6)						
7.50-24	SL	760	850(4)								
*7.60-15	SL	565	630(4)	695	750	800(6)	855	905	950(8)		
*9.00-10	SL	670(4)	755	820	890	955	1010	1070	1120(10)		
*9.0-16	SL	890	990	1080	1170	1250	1320(8)	1405	1500(10)		
*9.00-24	SL	1150	1285(6)	1400	1515	1600(8)					
*10.00-15	SL	1030	1150	1255	1355	1450(8)	1545	1650(10)	1725	18[illegible]0(12)	
*11.25-24	SL	1495	1665	1850(8)							
11.25-28	SL	1550	1730	1890	2040	2190	2325	2430(12)			
13.50-16.1	SL	1600(6)	1770	1950(8)	2090	2240(10)	2360(12)				
Low section height											
8.5L-14	SL	635	710	775	850(6)						
*9.5L-14	SL	710(4)	69[illegible]	875(6)	945	1010	1030([illegible])				
*9.5L-15	SL	750	835	900(6)	990	1055	1120(8)				1430(10)1440(12)
*11L-14	SL	840	925(6)								
*11L-15	SL	875	975(6)	1065	1150(8)	1240	1320(10)	1390	1450(12)		
*11L-16	SL	910	1030(6)	1110	1215(8)	1290	1360(10)				
*12.5L-15	SL	1035	1150(6)	1260	1360(8)	1460	1550(10)	1640	1750(12)		
*12.5L-16	SL	1080	1200	1310	1400(8)	1520	1615	1710	1800(12)	1900(14)	
14L-16.1	SL	1400(6)	1500	1750(8)	1900(10)	2010	2120(12)				
*16.5L-16.1	SL	1800(6)	2000(8)	2205	2360(10)	2575(12)	2715	2900(14)			
19L-16.1	SL	2265	2515	2725(10)							
*21.5L-16.1	SL	2725(8)	3000(10)	3250(12)	3550(14)						

#SL—service limited to agricultural usage

*Indicates that this is an industry-wide, high production volume size and should be considered as a preferred size for new design. Tire sizes listed are not necessarily available in all tire types for all ply ratings and some additional ply ratings may be available. Consult your tire supplier for availability information.

NOTES

1 Figures in parentheses denote ply rating. All loads to the left of ply rating denote maximum load for indicated inflation pressure.

2 For speeds not exceeding 15 km/h, above loads may be increased by 15% with no change in inflation pressure.

3 For implement tires used in free-rolling steering service on self-propelled equipment, use loads from table 4. If the size required is not listed in table [illegible], use loads from this table reduced by 33%. Steering tires on towed equipment do not require reduced loads.

4 Shipping inflation pressure shall not exceed the maximum pressure for the ply shown.

Table 1 – Flighting tolerances mm (in.)

Inside diameter			
0	to 40(1.6)	+3.0(0.12)	-0.0
40(1.6)	to 70(2.8)	+5.0(0.20)	-0.0
70(2.8)	and over	+7.0(0.28)	-0.0
Strip width			
20(0.8)	to 50(2.0)	+0.8(0.03)*)	-0.8(0.03)*)
50(2.0)	to 120(5.0)	+1.2(0.05)*)	-1.2(0.05)*)
120(5.0)	to 250(10.0)	+1.5(0.06)*)	-1.5(0.06)*)
250(10.0)	to 300(12.0)	+2.4(0.09)*)	2.4(0.09)*)
Pitch			
0	to 149(6.0)	+15.0(0.59)	-15.0(0.59)
150(6.0)	to 249(10.0)	+20.0(0.79)	-20.0(0.79)
250(10.0)	to 349(14.0)	+25.0(1.00)	-25.0(1.00)
350(14.0)	and over	+40.0(1.57)	-40.0(1.57)
Outside diameter (welded assembly)			
0	to 200(8.0)	+3.0(0.12)	-3.0(0.12)
200(8.0)	to 350(14.0)	+5.0(0.20)	-5.0(0.20)
350(14.0)	and over	+7.0(0.28)	-7.0(0.28)
Length			
0	to 1500(60.0)	+0.0	-13.0(0.[illegible])
1500(60.0)	and over	+0.0	-20.0(0.79)
Strip thickness		Standard mill tolerance for thickness specified.	

*) Mill edge tolerance. If tighter tolerances are required, they should be specified on the print and have the concurrence of the supplier.

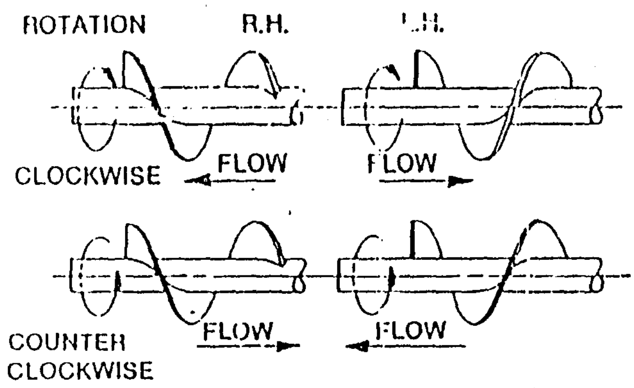

Figure 3 – Flow

The neutral axis is out about 1/5 the strip width from the I.D. (see figure 2). Calculate the edge and strip thicknesses as follows:

D = O.D.
d = I.D.
P = pitch
W = strip width = $(D - d)/2$
C = O.D. circumference = πD
N = neutral axis diameter = $d + 2W/5$
A = neutral axis circumference = πN
H = length of helix at N in one pitch = $\sqrt{A^2 + P^2}$
L = length of helix at O.D. in one pitch = $\sqrt{C^2 + P^2}$
T = strip thickness = $(LE)/H$
E = outer edge thickness = $(HT)/L$

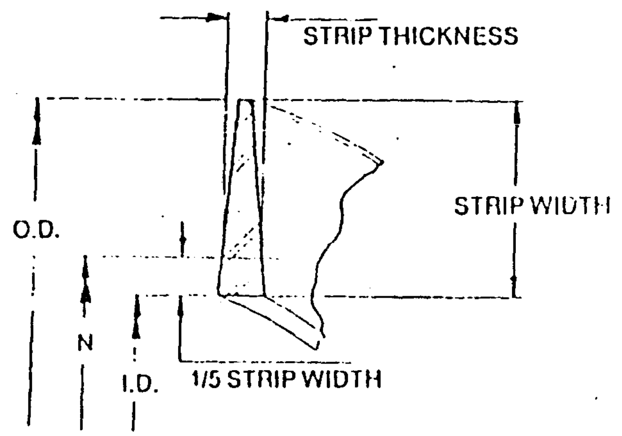

Figure 2 – Flighting dimension definitions

– Draft parameters and an expected range in drafts estimated by the model parameters for tillage and seeding implements

Implement	SI Units				English Units				Soil Parameters			Range ±%
	Width units	Machine Parameters A	B	C	Width units	Machine Parameters A	B	C	F_1	F_2	F_3	
MAJOR TILLAGE TOOLS												
Subsoiler/Manure Injector												
narrow point	tools	226	0.0	1.8	tools	129	0.0	2.7	1.0	0.70	0.45	50
30 cm winged point	tools	294	0.0	2.4	tools	167	0.0	3.5	1.0	0.70	0.45	50
Moldboard Plow	m	652	0.0	5.1	ft	113	0.0	2.3	1.0	0.70	0.45	40
Chisel Plow												
5 cm straight point	tools	91	5.4	0.0	tools	52	4.9	0.0	1.0	0.85	0.65	50
7.5 cm shovel/35 cm sweep	tools	107	6.3	0.0	tools	61	5.8	0.0	1.0	0.85	0.65	50
10 cm twisted shovel	tools	123	7.3	0.0	tools	70	6.7	0.0	1.0	0.85	0.65	50
Sweep Plow												
primary tillage	m	390	19.0	0.0	ft	68	5.2	0.0	1.0	0.85	0.65	45
secondary tillage	m	273	13.3	0.0	ft	48	3.7	0.0	1.0	0.85	0.65	35
Disk Harrow, Tandem												
primary tillage	m	309	16.0	0.0	ft	53	4.6	0.0	1.0	0.88	0.78	50
secondary tillage	m	216	11.2	0.0	ft	37	3.2	0.0	1.0	0.88	0.78	30
Disk Harrow, Offset												
primary tillage	m	364	18.8	0.0	ft	62	5.4	0.0	1.0	0.88	0.78	50
secondary tillage	m	254	13.2	0.0	ft	44	3.8	0.0	1.0	0.88	0.78	30
Disk Gang, Single												
primary tillage	m	124	6.4	0.0	ft	21	1.8	0.0	1.0	0.88	0.78	25
secondary tillage	m	86	4.5	0.0	ft	15	1.3	0.0	1.0	0.88	0.78	20
Coulters												
smooth or ripple	tools	55	2.7	0.0	tools	31	2.5	0.0	1.0	0.88	0.78	25
bubble or flute	tools	66	3.3	0.0	tools	37	3.0	0.0	1.0	0.88	0.78	25
Field Cultivator												
primary tillage	tools	46	2.8	0.0	tools	26	2.5	0.0	1.0	0.85	0.65	30
secondary tillage	tools	32	1.9	0.0	tools	19	1.8	0.0	1.0	0.85	0.65	25
Row Crop Cultivator												
S-tine	rows	140	7.0	0.0	rows	80	6.4	0.0	1.0	0.85	0.65	15
C-shank	rows	260	13.0	0.0	rows	148	11.9	0.0	1.0	0.85	0.65	15
No-till	rows	435	21.8	0.0	rows	248	19.9	0.0	1.0	0.85	0.65	20
Rod Weeder	m	210	10.7	0.0	ft	37	3.0	0.0	1.0	0.85	0.65	25
Disk-Bedder	rows	185	9.5	0.0	rows	106	8.7	0.0	1.0	0.88	0.78	40
MINOR TILLAGE TOOLS												
Rotary Hoe	m	600	0.0	0.0	ft	41	0.0	0.0	1.0	1.0	1.0	30
Coil Tine Harrow	m	250	0.0	0.0	ft	17	0.0	0.0	1.0	1.0	1.0	20
Spike Tooth Harrow	m	600	0.0	0.0	ft	40	0.0	0.0	1.0	1.0	1.0	30
Spring Tooth Harrow	m	2,000	0.0	0.0	ft	135	0.0	0.0	1.0	1.0	1.0	35
Roller Packer	m	600	0.0	0.0	ft	40	0.0	0.0	1.0	1.0	1.0	50
Roller Harrow	m	2,600	0.0	0.0	ft	180	0.0	0.0	1.0	1.0	1.0	50
Land Plane	m	8,000	0.0	0.0	ft	550	0.0	0.0	1.0	1.0	1.0	45
SEEDING IMPLEMENTS												
Row Crop Planter, prepared seedbed												
mounted												
seeding only	rows	500	0.0	0.0	rows	110	0.0	0.0	1.0	1.0	1.0	25
drawn												
seeding only	rows	900	0.0	0.0	rows	200	0.0	0.0	1.0	1.0	1.0	25
seed, fertilizer, herbicides	rows	1,550	0.0	0.0	rows	350	0.0	0.0	1.0	1.0	1.0	25
Row Crop Planter, no-till												
seed, fertilizer, herbicides												
1 fluted coulter/row	rows	1,820	0.0	0.0	rows	410	0.0	0.0	1.0	0.96	0.92	25
Row Crop Planter, zone-till												
seed, fertilizer, herbicides												
3 fluted coulters/row	rows	3,400	0.0	0.0	rows	765	0.0	0.0	1.0	0.94	0.82	35
Grain Drill w/press wheels												
< 2.4 m drill width	rows	400	0.0	0.0	rows	90	0.0	0.0	1.0	1.0	[illegible]	25
2.4 to 3.7 m drill width	rows	300	0.0	0.0	rows	67	0.0	0.0	1.0	1.0	1.0	25
> 3.7 m drill width	rows	200	0.0	0.0	rows	25	0.0	1.0	1.0	1.0	1.0	25
Grain Drill, no-till												
1 fluted coulter/row	rows	720	0.0	0.0	rows	160	0.0	0.0	1.0	0.92	0.79	35
Hoe Drill												
primary tillage	m	6,100	0.0	0.0	ft	420	0.0	0.0	1.0	1.0	1.0	50
secondary tillage	m	2,900	0.0	0.0	ft	200	0.0	0.0	1.0	1.0	1.0	50
Pneumatic Drill	m	3,700	0.0	0.0	ft	250	0.0	0.0	1.0	1.0	1.0	50

…3 – Rotary power requirement parameters

Machine Type	Parameter a kW	Parameter b kW/m	Parameter c kWh/t	Parameter a hp	Parameter b hp/ft	Parameter c hph/ton	Range[1] ±%
…aler, small rectangular	2.0	0	1.0[2]	2.7	0	1.2[2]	35
…aler, large rectangular bales	4.0	0	1.3	5.4	0	1.6	35
…aler, large round (var. chamber)	4.0	0	1.1	5.4	0	1.3	50
…ler, large round (fix. chamber)	2.5	0	1.8	3.4	0	2.2	50
…et harvester[3]	0	4.2	0	0	1.7	0	…0
…et topper	0	7.3	0	0	3.0	0	30
…mbine, small grains	20.0	0	3.6[4]	26.8	0	4.4[4]	50
…mbine, corn	35.0	0	1.6[4]	46.9	0	2.0[4]	[illegible]
…tton picker	0	9.3	0	0	3.8	0	20
…tton stripper	0	1.9	0	0	0.8	0	20
…ed mixer	0	0	2.3	0	0	2.8	50
…age blower	0	0	0.9	0	0	1.1	20
…t harvester, direct-cut	10.0	0	1.1	13.4	0	1.3	40
…age harvester, corn silage	6.0	0	3.3[5]	8.0	0	4.0[5]	40
…age harvester, wilted alfalfa	6.0	0	4.0[5]	8.0	0	4.9[5]	40
…age harvester, direct-cut	6.0	0	5.7[5]	8.0	0	6.9[5]	40
…age wagon	0	0	0.3	0	0	0.3	40
…der mixer	0	0	4.0	0	0	4.9	50
…ure spreader	0	0	0.2	0	0	0.3	50
…er, cutterbar	0	1.2	0	0	0.5	0	25
…er, disk	0	5.0	0	0	2.0	0	30
…er, flail	0	10.0	0	0	4.1	0	40
…er-conditioner, cutterbar	0	4.5	0	0	1.8	0	30
…er-conditioner, disk	0	8.0	0	0	3.3	0	30
…o harvester[3]	0	10.7	0	0	4.4	0	30
…o windrower	0	5.1	0	0	2.1	0	3…
… side delivery	0	0.4	0	0	0.2	0	5…
… rotary	0	2.0	0	0	0.8	0	5…
…r	0	1.5	0	0	0.6	0	5…
…inder, straw	5.0	0	8.4	6.7	0	10.2	50
…inder, alfalfa hay	5.0	0	3.8	6.7	0	4.6	50
…wer/swather, small grain	0	1.3	0	0	0.5	0	4…

…in average power requirement due to differences in machine design, machine adjustment, and crop conditions.
…se by 20% for straw.
…ower requirement must include a draft of 11.6 kN/m (± 40%) for potato harvesters and 5.6 kN/m (± 40%) for beet harvesters. A row spacing of 0.86 m for potatoes …71 m for beets is assumed.
…upon material-other-than-grain, MOG, throughput for small grains and grain throughput for corn. For a PTO driven machine, reduced parameter a by 10 kW.
…hput is units of dry matter per hour with a 9 mm (0.35 in.) length of cut. At a specific throughput, a 50% reduction in the length of cut setting or the use o… a …r screen increases power 25%.